Crib (2701) - Assembly and Operation Manual

Congratulations on purchasing a MDB Family product. This crib will provide many years of service if you adhere to the following guidelines for assembly, maintenance, and operation. This crib is for residential use only. Any institutional use is strictly prohibited.

Please be sure to follow the instructions for proper assembly. Use a Phillips head screwdriver for assembling the crib in addition to the Allen wrench included in the hardware box. Do not use power screwdrivers. All of our cribs are made from natural woods. Please understand that natural woods have color variations which are the result of nature and not defects in workmanship.

DO NOT SUBSTITUTE PARTS. ALL MODELS HAVE THE SAME QUANTITY OF PARTS AND HARDWARE. YOUR MODEL MAY LOOK DIFFERENT FROM THE ONE ILLUSTRATED DUE TO STYLISTIC VARIATIONS.

* The crib can later be converted into a toddler bed or a full-size bed. To convert to a toddler bed, turn to page 7. To convert to a full-size bed, turn to page 8.

HARDWARE

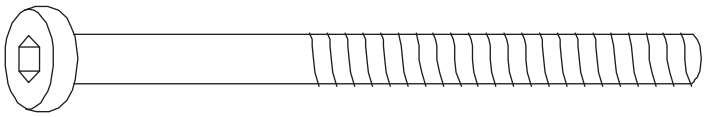

A. 3 1/2” Allen head bolts (6)

Tools Needed (not included)

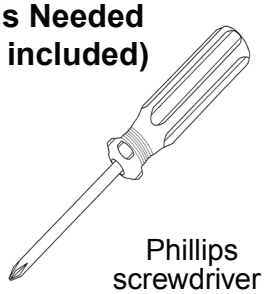

Phillips screwdriver

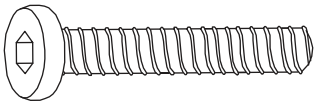

B. 1 1/2” Allen head bolts (8)

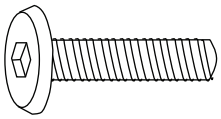

C. 1” Allen head bolts (4)

E. Barrel Nuts(6)

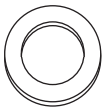

F. Washers (4)

G. Lock washers (18)

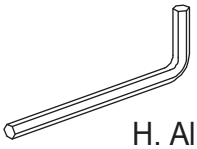

H. Allen wrench

Guard rail hardware :

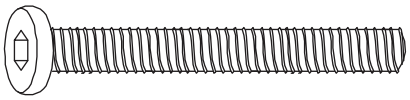

I. 2” Allen head bolts (4)

J. Lock washers (4)

CRIB PARTS

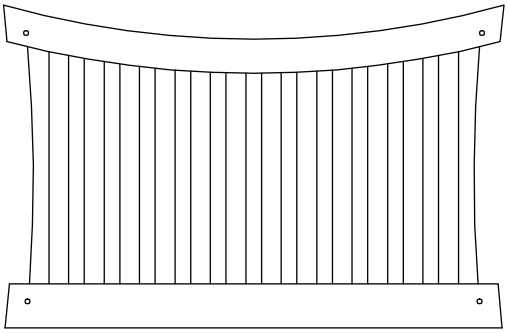

K. Front Rail

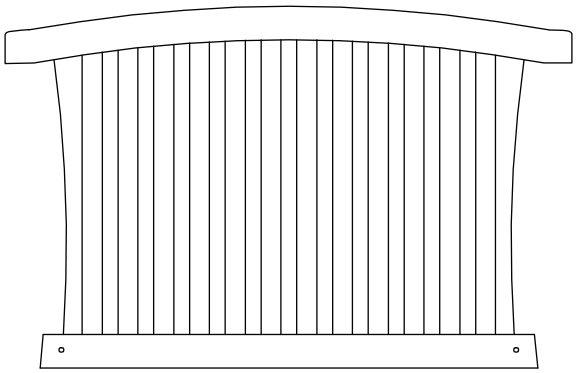

N. Headboard

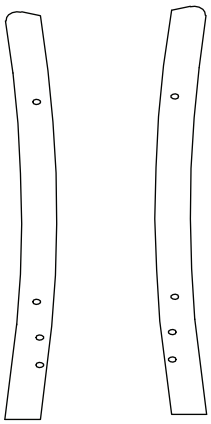

O. Front Left leg

P. Front Right Leg

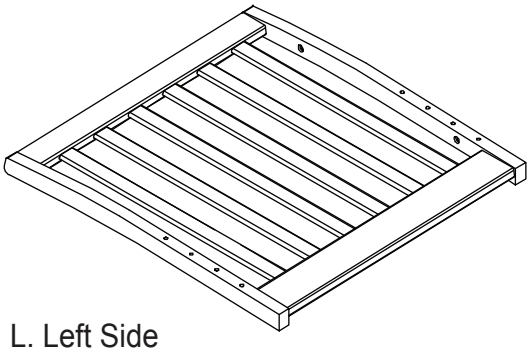

L. Left Side

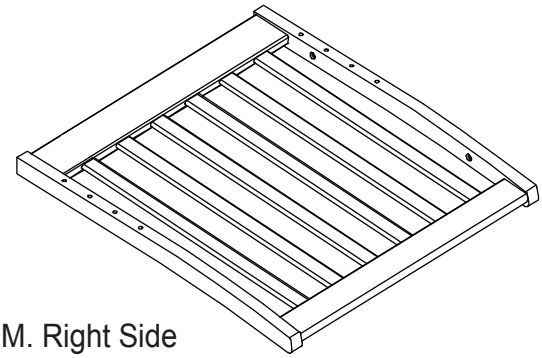

M. Right Side

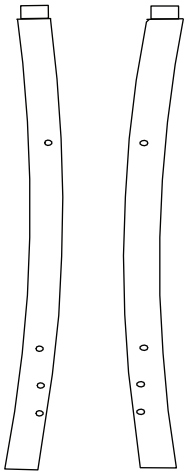

R. Rear Left leg

Q. Rear Right leg

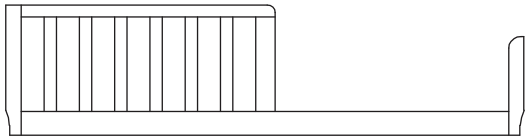

T. Guard Rail

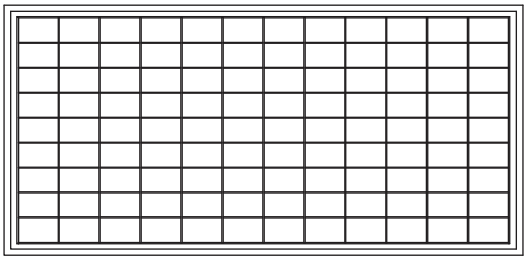

U. Spring frame

STEP 1.)
Attach legs (R and O, Q and P) to left and right sides (L and M) with 4 Allen head bolts (B).

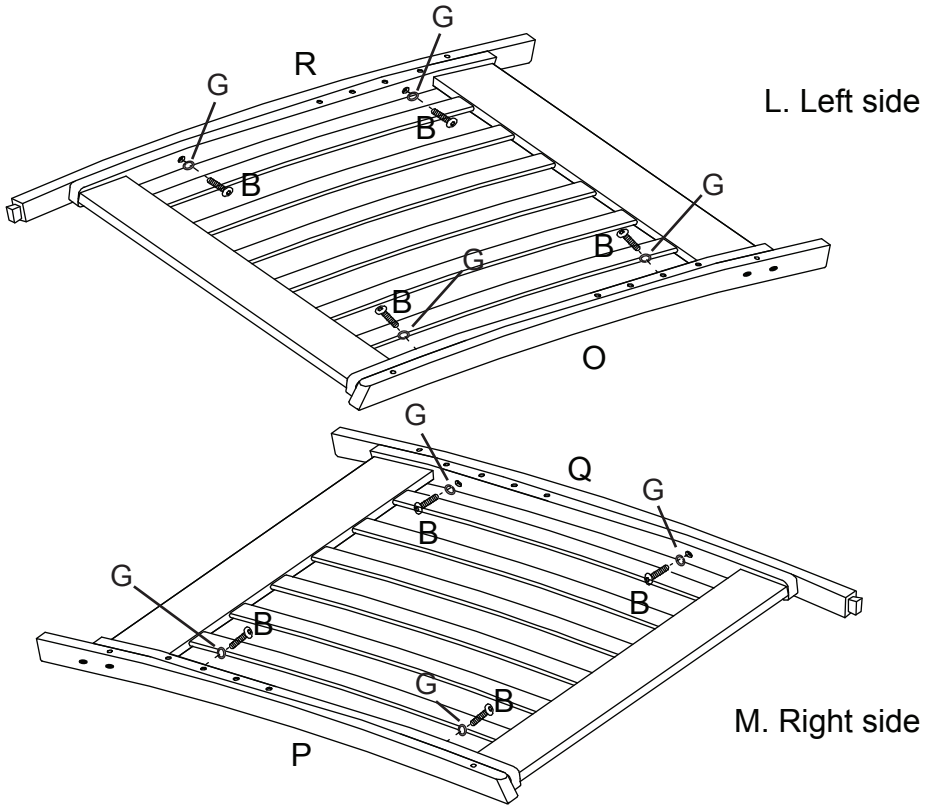

Do not overtighten.

STEP 2.)
Attach headboard to the two side rails.

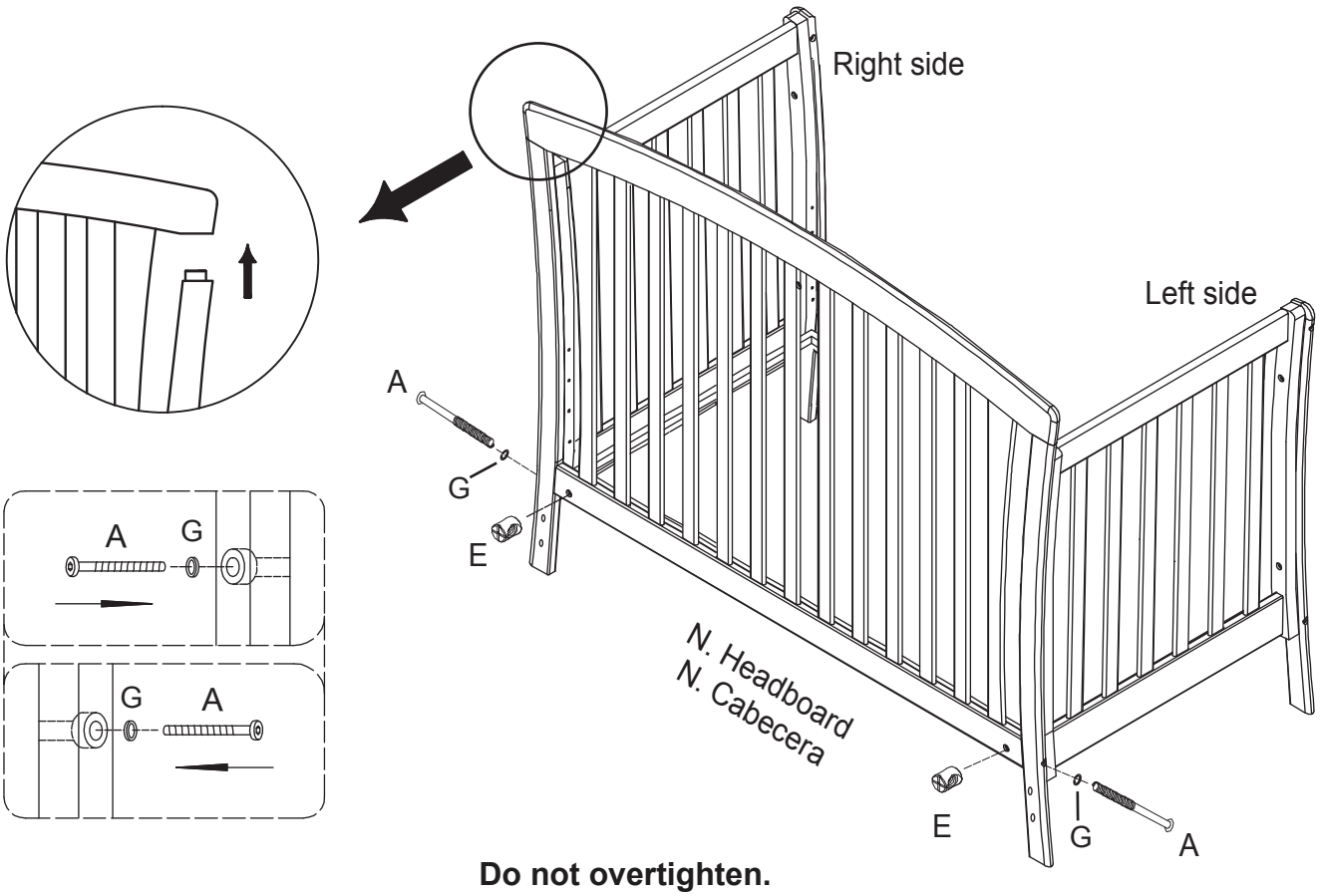

Do not overtighten.

STEP 3.)

Swing out four hangers at corner of the spring frame (U) carefully to avoid scratching the crib finish. Attach spring frame **FLAT SIDE UP**. Choose the height of the spring frame. Start at the highest level and adjust accordingly.

Bolt the spring frame (U) to headboards using Allen head bolts (C), washers (F), lock washers (G) and Allen wrench (H). As the child grows, it is important to lower the spring.

Make sure the spring frame is level.

* As your child grows, it is important to lower the mattress support.

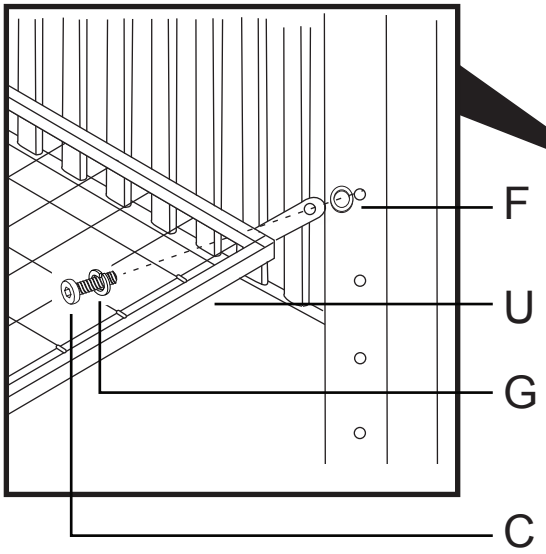

Do not overtighten.

STEP 4.)

Attach front rail (K) to the crib.

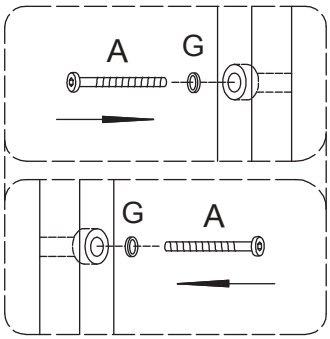

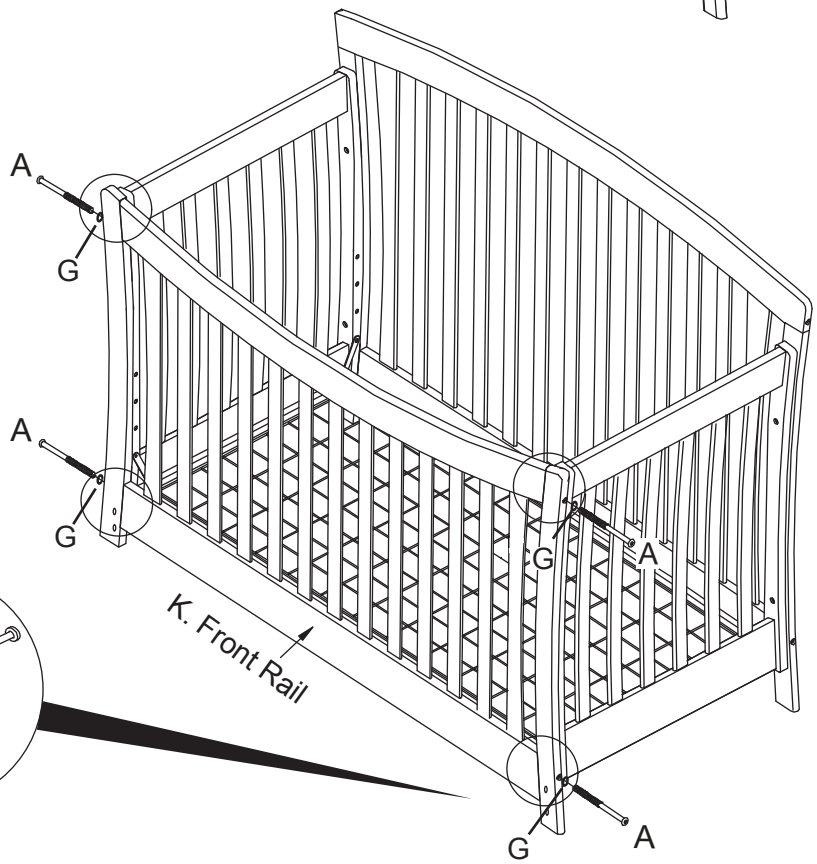

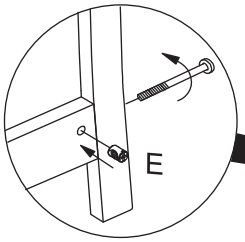

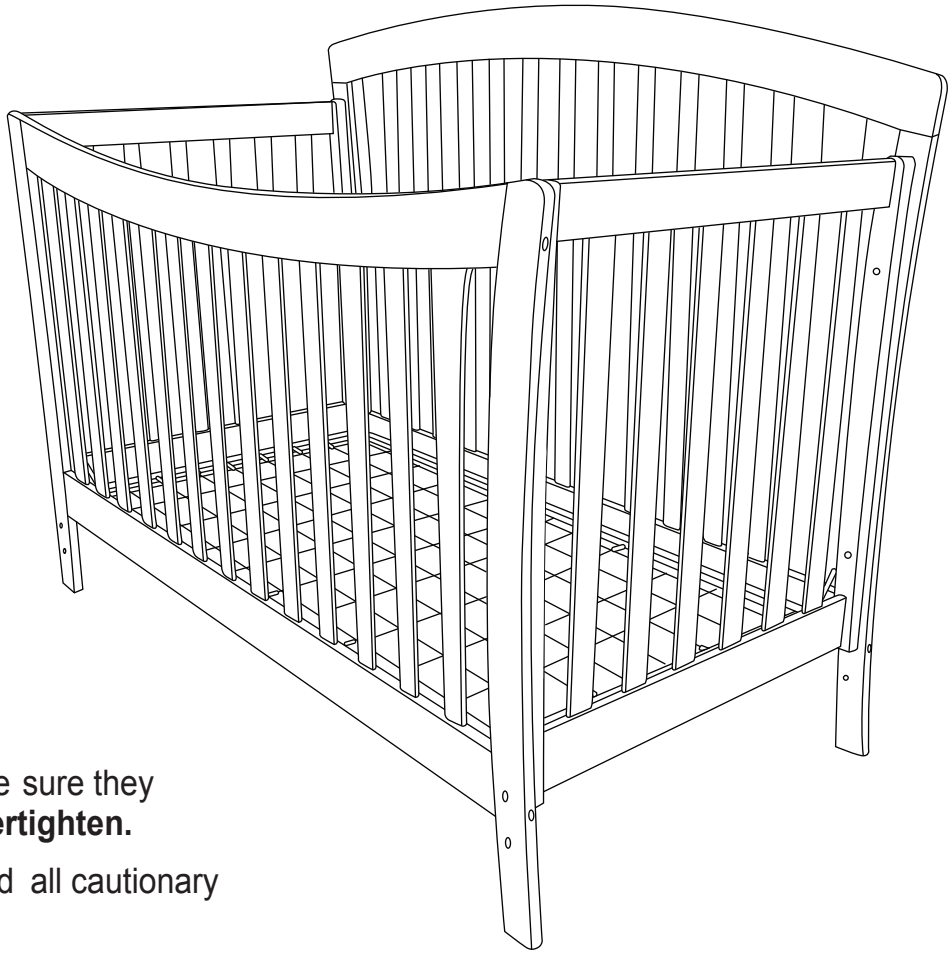

KEEP THIS MANUAL IN A SAFE PLACE FOR FUTURE REFERENCE.

Recheck all screws and bolts to be sure they are fastened securely. **Do not overtighten.**

Before using your crib, please read all cautionary statements on the insert sheet.

CAUTION: ANY MATTRESS USED IN THIS CRIB MUST BE AT LEAST 27 1/4 INCHES (69CM) BY 51 5/8 INCHES (131CM) WITH A THICKNESS NOT EXCEEDING 6 INCHES (15CM).

Please refer to the label (sample below) on the inside face of the headboard. Record the model/ item number and serial number of your crib, the name of the store where you made the purchase, the date of purchase and the wood finish in the box to the lower right.

WE WILL ASK YOU FOR YOUR SERIAL NUMBER FOR ALL WARRANTY AND REPLACEMENT PART REQUESTS. PLEASE REFER TO THE LAST PAGE OF THIS INSTRUCTION SHEET FOR WARRANTY INFORMATION. KEEP THIS MANUAL FOR FUTURE REFERENCE.

CAUTION: ANY MATTRESS USED IN THIS CRIB MUST BE AT LEAST 27 1/4 INCHES (69CM) BY 51 5/8 INCHES (131CM) WITH A THICKNESS NOT EXCEEDING 6 INCHES (15CM).

MODEL/ITEM NUMBER	XXXX
SERIAL NUMBER	XXXXXXXX
DATE OF MANUFACTURE	XX/XX

THIS PRODUCT CONFORMS TO THE APPLICABLE REGULATIONS OF THE CONSUMER PRODUCTS SAFETY COMMISSION.

855 WASHINGTON BLVD.
MONTEBELLO, CA 90640
www.themdbfamily.com

SAMPLE LABEL

Model Number: _____

Serial Number: _____

Store Where Purchased: _____

Date of Purchase: _____

Wood Finish: _____

Please read the Caution and Warning Statements insert before using your crib.

WARNING:

Failure to follow these warnings and the assembly instructions could result in serious injury or death.

READ ALL INSTRUCTIONS BEFORE ASSEMBLING CRIB. KEEP THE MANUAL FOR FUTURE USE.

⚠ WARNING:

Parents should ensure a safe environment for the child by checking regularly, before placing the child in the product, that every component is properly and securely in place.

- Do not use this crib if you cannot exactly follow the accompanying instructions.
- Infants can suffocate on soft bedding. Never add a pillow or comforter. Never place additional padding under an infant.
- To reduce the risk of SIDS, pediatricians recommend healthy infants be placed on their backs to sleep, unless otherwise advised by your physician.
- Strings can cause strangulation! Do not place items with a string around a child's neck, such as hood strings or pacifier cords. Do not place cords, straps, or similar items that could become wound around the child's neck in or near this crib. Do not suspend strings over a crib or attach strings to toys.
- To help prevent strangulation tighten all fasteners. A child can trap parts of the body or clothing on loose fasteners.
- DO NOT place a crib near a window where cords from blinds or drapes may strangle a child. Do not place this crib near a window or a patio door where a child could reach the cord of a blind or curtain and be strangled.
- When a child is able to pull to a standing position, set the mattress to the lowest position and remove bumper pads, large toys and other objects that could serve as steps for climbing out.
- Do not use this crib if the child is able to climb out unaided or is taller than 35 in. (89cm).
- Check this product for damaged hardware, loose joints, loose bolts or other fasteners, missing parts or sharp edges before and after assembly and frequently during use. Securely tighten loose bolts and other fasteners. DO NOT use crib if any parts are missing, damaged or broken. DO NOT substitute parts. Contact **MDB FAMILY** for replacement parts and instructional literature if needed.
- DO NOT use a water mattress with this crib.
- For cribs equipped with teething rails, replace teething rail if damaged, cracked or loose.
- If refinishing, use a non-toxic finish specified for children's products.
- Never use plastic shipping bags or other plastic films as mattress covers because they can cause suffocation.
- Infants can suffocate in gaps between crib sides when used with a mattress that is too small.
- Follow warnings on all products in a crib.
- Ensure that the sides are properly latched or locked in place when the crib is occupied.
- The mattress used with this crib should not be more than 15cm thick and should be of such length with width that the gap between the mattress and the sides of the crib is no more than 3cm when the mattress is pushed into the corner of the crib.

⚠ WARNING:

Please do NOT remove any wood screws in the normal disassembly of the crib.

ONE YEAR LIMITED WARRANTY:

We will replace any missing parts at the time of purchase or any defective item within a one year period from the date of original purchase. Please keep your receipt so that we may process your warranty request. This warranty only covers new units with original packaging and ownership, and is not transferable. It does not cover any used, secondhand or demo models.

This warranty does not cover any damaged or defective parts that result from installation and assembly, normal wear and tear, abuse, negligence, improper use or alteration to the finish, design, and hardware of the crib. The specific legal rights of this warranty may vary from state to state. Some states do not allow any exclusion or limitation of incidental damages. Some states do not allow limitation on how long an implied warranty lasts.

Storage:

- Pine woods exchange moisture with the air adjusting to major changes in room temperature and humidity. Therefore, it is best to place your furniture away from heating or air-conditioning vents.
- Sunlight is not friendly to solid wood furniture and prolonged direct exposure to harsh sunlight can discolor the finish. Be careful not to place your furniture in direct sunlight for extended periods of time. As with all your fine furniture, blot up spills immediately.

Care and Cleaning:

- Do not scratch or chip the finish. Do not use abrasive chemicals for cleaning. Clean with mild soap on a soft rag. Rinse and dry thoroughly. If you ever refinish this furniture, be sure to use only a non-toxic finish specified for children's products. If you choose to refinish this furniture, the warranty will be voided.

Registering your product is even easier than before. You can register your product on our website at : www.themdbfamily.com

IF YOU WOULD LIKE TO ORDER REPLACEMENT OR MISSING PARTS PLEASE VISIT US AT:
WWW.THEMDBFAMILY.COM

OR YOU CAN CONTACT US BY MAIL:
MDB FAMILY
855 WASHINGTON BLVD.
MONTEBELLO, CA 90640

revised05MAY2011

Crib (2701) - Daybed conversion assembly

* All of the parts and hardware you will need are supplied with the crib at the time of purchase.

STEP 1.) Detach the front rail by removing 4 **A** bolts. And move the spring frame to the lowest level.

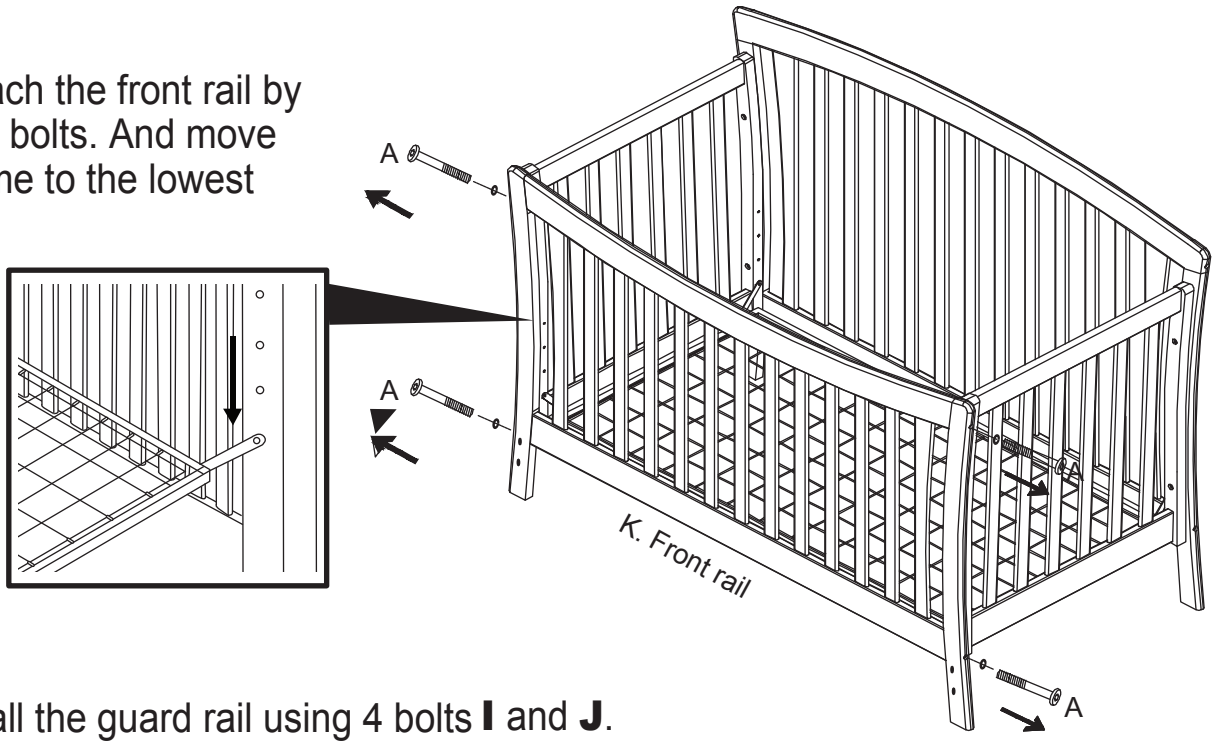

STEP 2.) Install the guard rail using 4 bolts **I** and **J**.

The guard rail can be installed with the panel facing the left or the right.

The illustration shows the guard rail with the panel to the left .

Recheck all screws and bolts to be sure they are fastened securely.

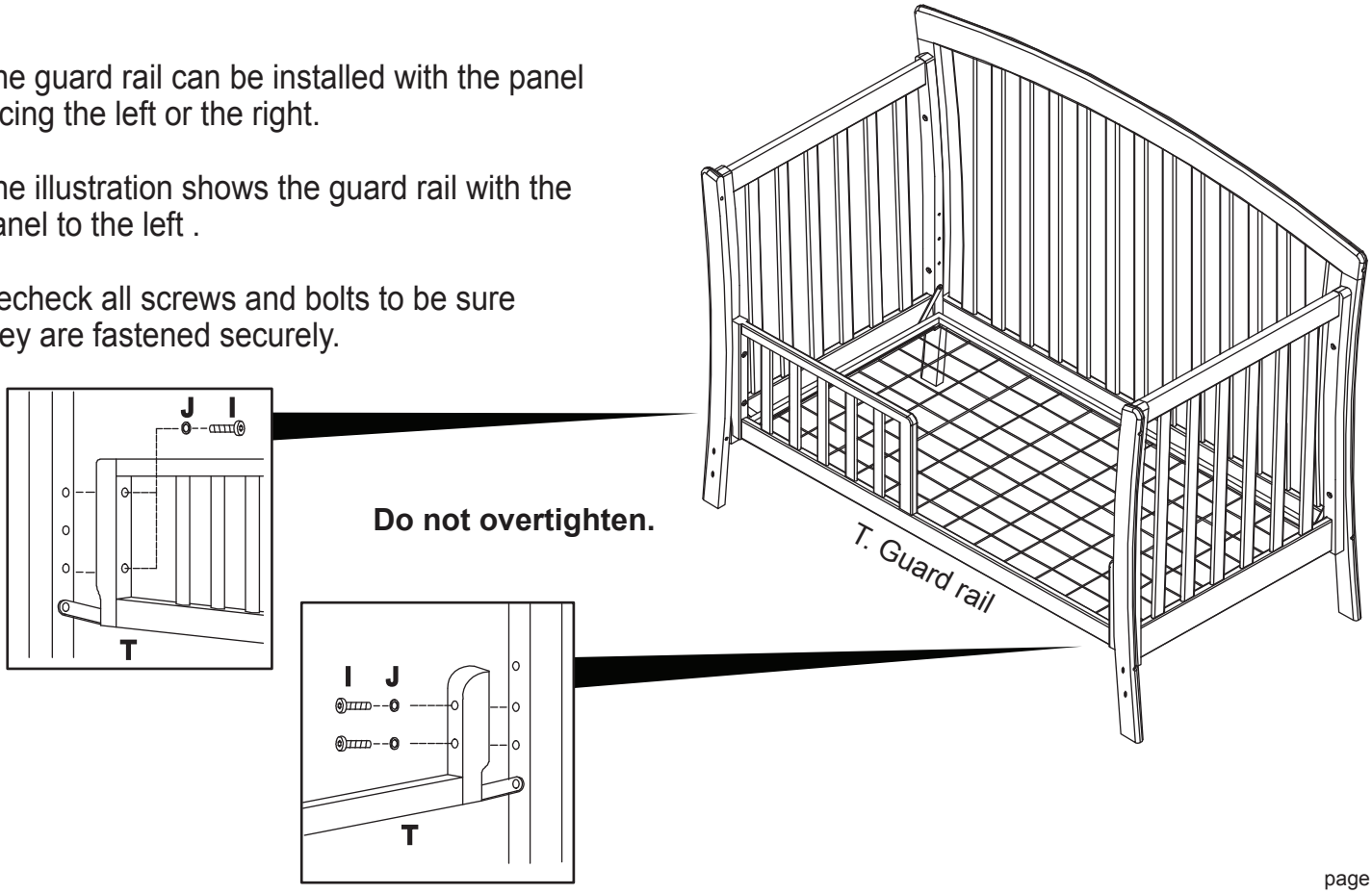

Do not overtighten.

The mattress intended for use on the bed shall be a full-size crib mattress having minimum dimensions of 51 5/8 in. (1310mm) in length, 27 1/4 in. (690mm) in width and 4 in. (100mm) in thickness, or a greater thickness not exceeding 6 in (152mm).

The intended user's minimum age must be at least 15 months old and maximum weight must not exceed 50 lbs (22.7 kg).

⚠WARNING :

Failure to follow these warnings and the assembly instructions could result in serious injury or death from entrapment or strangulation.

DO NOT place bed near windows where cords from blinds or drapes may strangle a child. DO NOT place items with a string, cord, or ribbon, around a child's neck, such as hood strings or pacifier cords. DO NOT suspend strings over a toddler bed for any reason. If guard rails are used as the mattress containment means, guard rails provided must be used to avoid the formation of a gap between the mattress and the bed that could cause an entrapment.

MDB

Conversion Rails (4799-Sold Separately) Assembly Instructions

*For all 4 in 1 cribs, please contact a retailer to order your full size adult wooden bed rails for your full size bed conversion.

HARDWARE

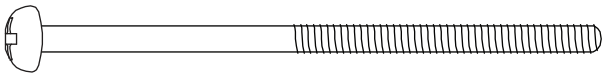

3" Bolt (8)

Barrel Nut (8)

STEP 1.) Remove the side panel assemblies.

STEP 2.) Attach the conversion rails as shown using eight 3" bolts and barrel nuts.
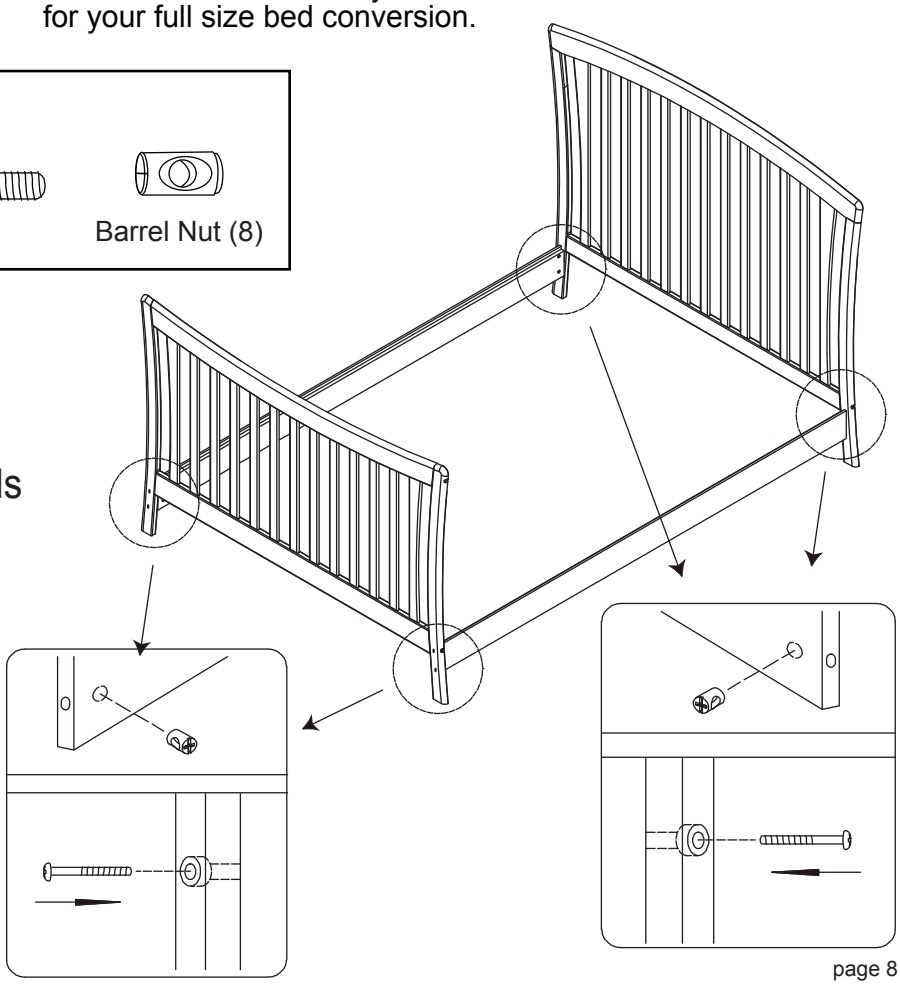
Do not overtighten.