FRIGIDAIRE

All about the Use & Care of your Panini Grill/Griddle

TABLE OF CONTENTS

Important Safeguards 2
Parts and Features 3-4
Prior to Using Your Panini Grill/Griddle 5
Cooking with Your Panini Grill/Griddle 5
Cleaning and Maintenance 6
Problem Solving..... 6
Warranty Information 7
Spanish User's Manual 8-15
French User's Manual 16-23

900253214-UM (December 2011)

www.frigidaire.com USA & Canada 1-888-845-7330

Downloaded from www.Manualslib.com manuals search engine

IMPORTANT SAFEGUARDS

When using electrical appliances, basic safety precautions should always be followed, including the following:

1. **READ ALL INSTRUCTIONS.**
2. Do not touch hot surfaces. Use handles or knobs.
3. To protect against fire, electric shock, and injury to persons, **DO NOT IMMERSE OR PARTIALLY IMMERSE CORD, PLUG, OR APPLIANCE** in water or other liquids.
4. Close supervision is necessary when any appliance is used by or near children.
5. Unplug from outlet when not in use and before cleaning. Allow to cool before putting on or taking off parts, and before cleaning appliance.
6. Do not operate any appliance with a damaged cord or plug, or after the appliance has malfunctioned or has been damaged in any manner. Return the appliance to the nearest authorized service center for examination, repair or adjustment.
7. The use of accessory attachments not recommended by the appliance manufacturer may result in fire, electrical shock, or risk of injury to persons.
8. Do not use outdoors.
9. Do not let the power cord touch hot surfaces or hang over edge of table or counter where it can be pulled on by children or tripped over unintentionally.
10. Do not place on or near hot gas or electric burner, or in a heated oven or in a microwave oven.
11. Preheat the unit until the green "ready" light turns on.
12. Unplug the unit when finished using.
13. Do not use appliance for other than intended use.
14. Extreme caution must be exercised when moving an appliance containing hot oil or other hot liquids.
15. To disconnect, turn the control to the OFF setting, then remove plug from wall outlet. Never unplug by pulling on the cord.
16. To prevent burns or injury, exercise extreme caution when disposing of hot grease or other hot liquids and when removing or transporting the drip tray as the contents may be hot.
17. Do not clean with metal scouring pads. Pieces can break off the pad and touch electrical parts involving a risk of electrical shock.
18. Do not place cardboard, plastic, paper or other flammable materials in or on the appliance.
19. While in operation, a fire may occur if the appliance is covered or touching flammable material, including curtains, draperies, walls, and the like. Do not store or lay any item on the appliance during operation.
20. **WARNING: TO REDUCE THE RISK OF FIRE OR ELECTRIC SHOCK, ONLY AUTHORIZED PERSONNEL SHOULD DO REPAIRS.**

SAVE THESE INSTRUCTIONS

Consumer Safety Information

THIS UNIT IS FOR HOUSEHOLD USE ONLY.

Polarized Plug

This appliance has a polarized plug (one blade is wider than the other). To reduce the risk of electric shock, this plug will fit in a polarized outlet only one way. If the plug does not fit fully into the outlet, reverse the plug and reinsert. If it still does not fit, contact a qualified electrician. Do not modify the plug in any way.

⚠ CAUTION

Short cord Instructions: Your Panini Press Grill and Griddle appliance is fitted with a short power supply cord as a safety precaution to prevent personal injury or property damage resulting from pulling, tripping or becoming entangled with a longer cord. Do not allow children to use or be near this appliance without close adult supervision. If an extension cord is used, (1) the marked electrical rating of the cord set or extension cord should be at least as great as the electrical rating of the appliance, (2) the cord should be arranged so that it will not drape over the countertop or tabletop where it can be pulled on by children or tripped over, (3) If the appliance is of the grounded type, the extension should be a grounding 3-wire cord.

Electrical Power

If the electric circuit is overloaded with other appliances, your appliance may not operate properly. It should be operated on a separate electric circuit from other appliances.

Downloaded from www.Manualslib.com manuals search engine

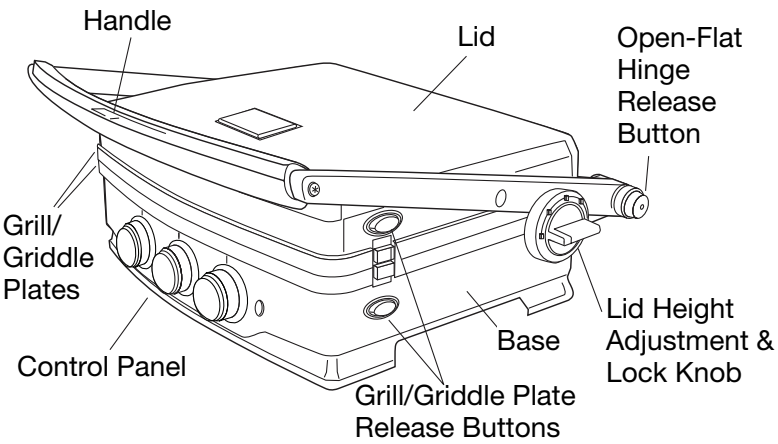

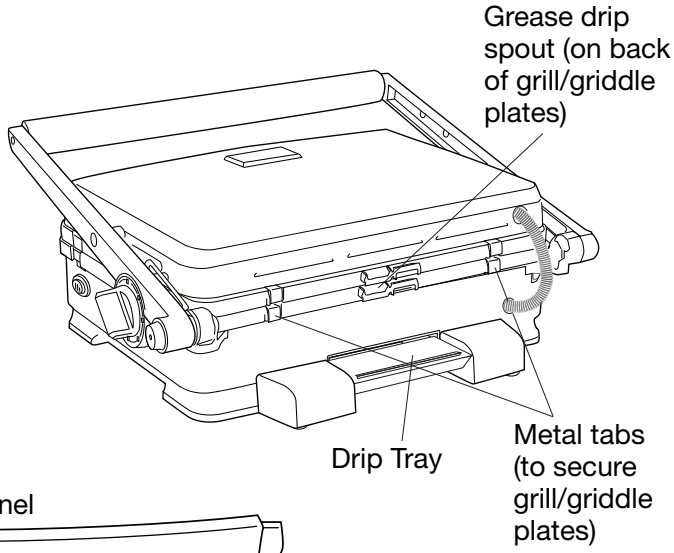

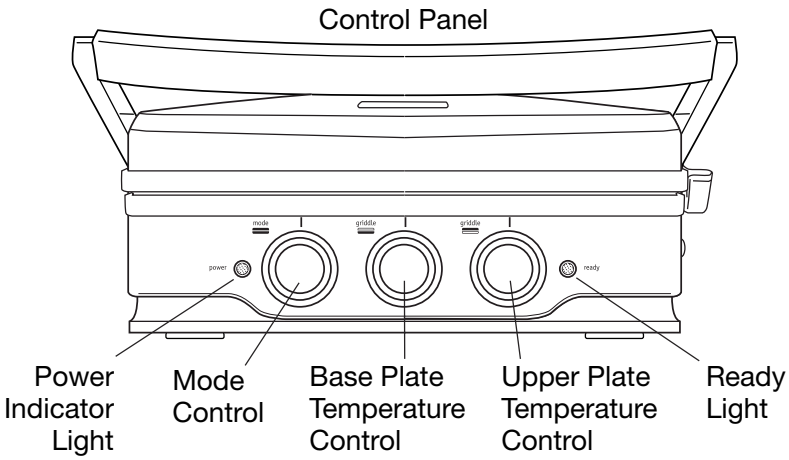

Power Indicator Light

Light will illuminate when appliance is plugged in and mode is set on low, medium, high, or griddle. Power indicator light will *not* illuminate when the mode control is turned to 'panini' or to 'off.'

Mode Control

Use this control to set the temperature for making panini sandwiches, to select the griddle mode, and to turn the appliance off. In panini mode, both grill/griddle plates will be heated to Low, Medium, or High, based on the selected setting. When the mode is set to griddle, temperature is controlled by the two temperature control knobs.

Dual Temperature Control

Dual controls allow you to set different temperatures for the two grill/griddle plates. The center knob controls the temperature of the plate on the base, and the right knob controls the temperature of the plate on the lid. Each plate can be adjusted independently to temperatures from 150°F to 450°F. This is ideal when using the panini grill/griddle in the open flat position, as it allows you to cook different foods at different temperatures.

Ready Light

The ready light will illuminate when the cooking plates reach the selected temperature. If you are using the griddle function and have set two different temperatures, the light will turn on when the hotter temperature is reached.

Product Specifications

Model number	FPPG12K7MS
Volts	120V AC only
Hertz	60 HZ
Rated wattage, total	1500 watts
Rated wattage, upper heating element	700 watts
Rated wattage, lower heating element	800 watts
Dimensions	Width 7 in. (180 mm) Depth 14.2 in. (360 mm) Height 15.75 in (400 mm)
Cooking surface	240 sq. in. (120 sq. in. per cooking plate)

Downloaded from www.Manualslib.com manuals search engine

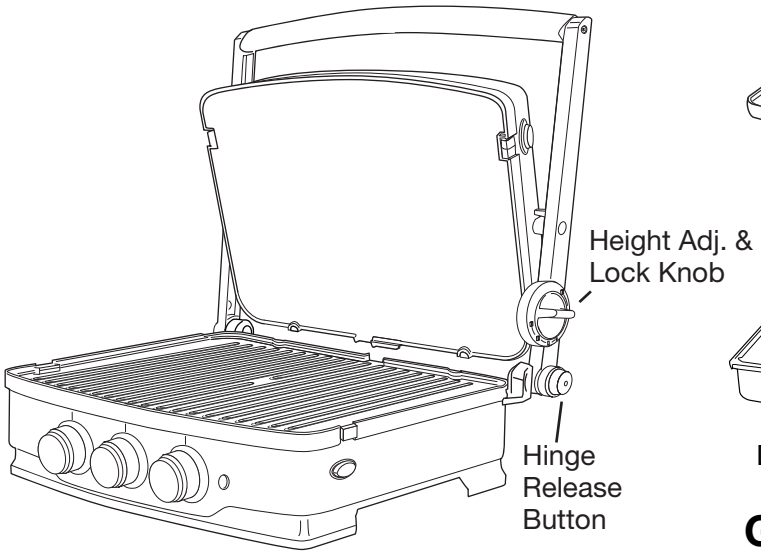

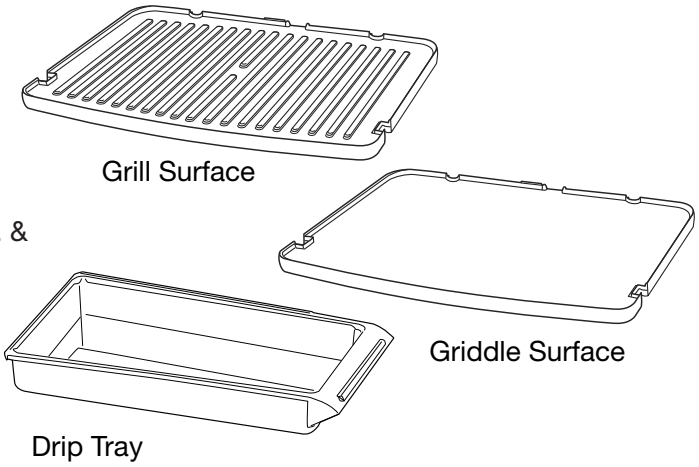

Lid Height Adjustment and Lock

This feature allows you to set the lid height at four different stopping points for more cooking flexibility. This is ideal when cooking delicate foods such as fish or panini sandwiches with soft or delicate ingredients. To adjust, rotate height adjustment knob clockwise (toward the back) to one of four height settings.

This feature also allows you to lock the lid in its closed position for safe and easy transport. To lock, turn knob counter-clockwise (toward the front).

⚠ CAUTION

Do not attempt to move or transport the panini grill/griddle while it is still hot or when there is anything in the drip tray.

Open-Flat Hinge Release Button

When using the panini grill/griddle as a panini press or press grill, the lid will stop in the upright position to allow you to add or remove food from the cooking surface. For use as a griddle or table-top grill, press the open-flat hinge release button while grasping the handle and rotate the lid all the way open until the handle rests on the table or counter.

⚠ CAUTION

Be sure the entire panini grill/griddle is placed on a flat, level, and stable surface.

Grill/Griddle Plates

The grill/griddle plates are removable, reversible, and dishwasher safe for easy cleaning. Either plate will fit both the top and bottom position. One side of each plate has raised ribs for making panini sandwiches and grilling; the other side is smooth for using as a griddle or flat grill. Any combination of grill/griddle plate configurations can be used in either the closed or open flat position. Be careful to avoid scratching the non-stick surface to prolong the life of the coating.

Drip Tray

The drip tray catches grease and drippings and should be emptied and cleaned after each use.

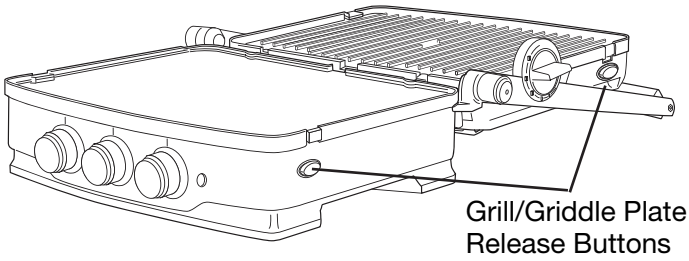

Removing and Installing Grill/Griddle Plates

Be sure plates are cool before attempting to remove them. Open the panini grill/griddle to the flat position and press the grill/griddle plate release buttons. Lift each plate up and out from under the metal tabs located between the two plates.

To install the plates, open the panini grill/griddle to the flat position and slide one plate at a time under the metal tabs located between the two plates. Next, press each plate down to latch the side clamps. Be sure the plates are properly secured before use.

Downloaded from www.Manualslib.com manuals search engine

PRIOR TO USING YOUR PANINI GRILL/GRIDDLE

1. Carefully unpack the contents from the box. Check to make sure that all accessories are accounted for and that the panini grill/griddle and accessories appear to be free from any damage. If you discover any damage or missing parts, please contact our customer service department at 1-888-845-7330 prior to plugging the unit in.
2. Remove any printed material or tape from the panini grill/griddle.
3. Remove, wash, and dry the drip tray and grill/griddle plates (see Removing and Installing Grill/Griddle Plates, page 4).
4. Install the grill/griddle plates and drip tray back into the panini grill/griddle.

COOKING WITH YOUR PANINI GRILL/GRIDDLE

Your panini grill/griddle offers a number of cooking options to meet your needs. It can be used in the closed position as a panini press and contact grill or in the open flat position as a griddle or table-top grill. In either cooking position, you can use either side of the grill/griddle plates – smooth or ribbed. You can also mix and match the grill/griddle plates for even greater flexibility in food preparation.

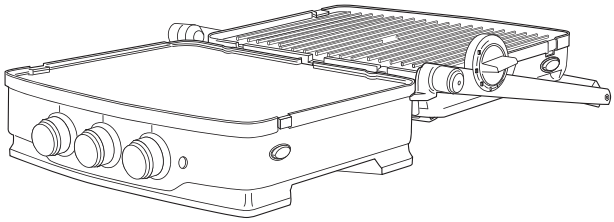

To use as a Panini Sandwich Maker or Press Grill

1. Install both grill/griddle plates with ribbed sides facing out. Place the panini grill/griddle in the closed position.
2. Plug in the unit.
3. Adjust the mode control to the desired panini heat level of Low, Medium, or High. This will control the temperature of both the top and bottom plates.
4. The ready light will illuminate when the desired temperature is reached.
5. Open the lid to the upright position, place your panini sandwich on the grill plate and close the lid. If desired, use the lid height adjustment to limit how far down the lid presses (see page 4).
6. When cooked to the desired level, remove your panini sandwich and enjoy!

Use this same process to grill hamburgers, steaks, and many other foods. Turn the grill/griddle plates to the smooth sides to grill flat-iron style steaks, quesadillas, and much more.

IMPORTANT

Check all meats with a food thermometer to ensure they are properly cooked.

To use as a Griddle

1. Install both grill/griddle plates with smooth sides facing out. Place the panini grill/griddle in the open flat position. (See Open Flat Hinge Release Button, page 4)
2. Plug in the unit.
3. Turn the mode control to ‘Griddle.’
4. Set both temperature control knobs to the desired heat, from 150°F to 450°F. The middle knob will control temperature of the base (front) plate. The right knob will control the temperature of the lid (back) plate.
5. The ready light will illuminate when the desired temperature is reached. If you have set two different temperatures, the light will turn on when the hotter temperature is reached.
6. The griddle is now ready to use!

To use as an indoor table-top grill, turn the grill/griddle plates with ribbed sides facing out. You can also use a combination of one grill plate and one griddle plate to suit your particular cooking needs.

WARNING

Electrical Shock Hazard

Plug the unit into a properly grounded electrical outlet.

Failure to follow these instructions can result in death, fire, or electrical shock.

Downloaded from www.Manualslib.com manuals search engine

CLEANING AND MAINTENANCE

- Prior to cleaning, turn the panini grill/griddle off and unplug it.
- Allow ample time for all surfaces of the panini grill/griddle to cool completely.
- Empty the drip tray. Carefully slide the drip tray out the back of the panini grill/griddle and dispose of the contents appropriately. Wash the drip tray by hand or in the top rack of the dishwasher. Be sure the drip tray is dry before inserting it back into the panini grill/griddle.
- Wash the grill/griddle plates in the dishwasher or wash by hand in warm soapy water. Rinse and dry. Be sure plates are thoroughly dry before placing back in the panini grill/griddle.
- For daily cleaning, wipe the outside surface with a clean, damp cloth. To further enhance the lid's stainless steel exterior finish, Frigidaire recommends Ecossential Stainless Steel Cleaner, by SmartChoice™. You can order online at http://frigidaire.stores.yahoo.net or by phone, 1-800-599-7579.

⚠ CAUTION

To prevent burns or injury, use extreme caution when removing and transporting the drip tray, as contents may be hot. Never move or transport the panini grill/griddle without first checking to be sure the drip tray is empty.

PROBLEM SOLVING

Problem	Solutions
Can't lift lid	• Check the lock knob. To unlock, turn knob clockwise (see page 4).
Grill/griddle plate is not heating	• Check to be sure appliance is plugged in. • Be sure both grill/griddle plates are in correct position and properly secured (see page 4). • If using 'panini' mode, select either Low, Medium or High temperature. • If using 'griddle' mode, be sure you have set the temperature for both plates (see page 5).

Downloaded from www.Manualslib.com manuals search engine

SMALL DOMESTIC APPLIANCE WARRANTY

Your appliance is covered by a one-year limited warranty. For one year from your original date of purchase, Electrolux will pay all costs for repairing or replacing any parts of this appliance that prove to be defective in materials or workmanship when such appliance is installed, used and maintained in accordance with the provided instructions.

Exclusions **This warranty does not cover the following:**

1. Products with original serial numbers that have been removed, altered or cannot be readily determined.
2. Product that has been transferred from its original owner to another party or removed outside the USA or Canada.
3. Rust on the interior or exterior of the unit.
4. Products purchased “as-is” are not covered by this warranty.
5. Food loss due to any refrigerator or freezer failures.
6. Products used in a commercial setting.
7. Service calls which do not involve malfunction or defects in materials or workmanship, or for appliances not in ordinary household use or used other than in accordance with the provided instructions.
8. Service calls to correct the installation of your appliance or to instruct you how to use your appliance.
9. Expenses for making the appliance accessible for servicing, such as removal of trim, cupboards, shelves, etc., which are not a part of the appliance when it is shipped from the factory.
10. Service calls to repair or replace appliance light bulbs, air filters, water filters, other consumables, or knobs, handles, or other cosmetic parts.
11. Surcharges including, but not limited to, any after hour, weekend, or holiday service calls, tolls, ferry trip charges, or mileage expense for service calls to remote areas, including the state of Alaska.
12. Damages to the finish of appliance or home incurred during installation, including but not limited to floors, cabinets, walls, etc.
13. Damages caused by: services performed by unauthorized service companies; use of parts other than genuine Electrolux parts or parts obtained from persons other than authorized service companies; or external causes such as abuse, misuse, inadequate power supply, accidents, fires, or acts of God.

DISCLAIMER OF IMPLIED WARRANTIES; LIMITATION OF REMEDIES

CUSTOMER’S SOLE AND EXCLUSIVE REMEDY UNDER THIS LIMITED WARRANTY SHALL BE PRODUCT REPAIR OR REPLACEMENT AS PROVIDED HEREIN. CLAIMS BASED ON IMPLIED WARRANTIES, INCLUDING WARRANTIES OF MERCHANTABILITY OR FITNESS FOR A PARTICULAR PURPOSE, ARE LIMITED TO ONE YEAR OR THE SHORTEST PERIOD ALLOWED BY LAW, BUT NOT LESS THAN ONE YEAR. ELECTROLUX SHALL NOT BE LIABLE FOR CONSEQUENTIAL OR INCIDENTAL DAMAGES SUCH AS PROPERTY DAMAGE AND INCIDENTAL EXPENSES RESULTING FROM ANY BREACH OF THIS WRITTEN LIMITED WARRANTY OR ANY IMPLIED WARRANTY. SOME STATES AND PROVINCES DO NOT ALLOW THE EXCLUSION OR LIMITATION OF INCIDENTAL OR CONSEQUENTIAL DAMAGES, OR LIMITATIONS ON THE DURATION OF IMPLIED WARRANTIES, SO THESE LIMITATIONS OR EXCLUSIONS MAY NOT APPLY TO YOU. THIS WRITTEN WARRANTY GIVES YOU SPECIFIC LEGAL RIGHTS. YOU MAY ALSO HAVE OTHER RIGHTS THAT VARY FROM STATE TO STATE.

If You Need Service Keep your receipt, delivery slip, or some other appropriate payment record to establish the warranty period should service be required. If service is performed, it is in your best interest to obtain and keep all receipts. Service under this warranty must be obtained by contacting Electrolux at the addresses or phone numbers below.

This warranty only applies in the USA and Canada. In the USA, your appliance is warranted by Electrolux Major Appliances North America, a division of Electrolux Home Products, Inc. In Canada, your appliance is warranted by Electrolux Canada Corp. Electrolux authorizes no person to change or add to any obligations under this warranty. Obligations for service and parts under this warranty must be performed by Electrolux or an authorized service company. Product features or specifications as described or illustrated are subject to change without notice.

USA
1.888-845-7330
Electrolux Home Products, Inc.
10200 David Taylor Drive
Charlotte, NC 28262

Electrolux

Canada
1.888-845-7330
Electrolux Canada Corp.
5855 Terry Fox Way
Mississauga, Ontario, Canada
L5V 3E4
Printed in China

Downloaded from www.Manualslib.com manuals search engine