HP IP Console Switch
User Guide

October 2004 (Fourth Edition)
Part Number 263924-004

Downloaded from www.Manualslib.com manuals search engine

© Copyright 2002-2004 Hewlett-Packard Development Company, L.P.

The information contained herein is subject to change without notice. The only warranties for HP products and services are set forth in the express warranty statements accompanying such products and services. Nothing herein should be construed as constituting an additional warranty. HP shall not be liable for technical or editorial errors or omissions contained herein.

Microsoft, Windows, and Windows NT are U.S. registered trademarks of Microsoft Corporation. Linux is a U.S. registered trademark of Linus Torvalds. Energy Star is a U.S. registered mark of the United States Environmental Protection agency. UNIX is a registered trademark of The Open Group.

HP IP Console Switch User Guide

October 2004 (Fourth Edition)

Part Number 263924-004

Audience Assumptions

This document is for the person who installs racks and rack products. This procedure is performed only by trained personnel. HP assumes you are qualified in performing installations and trained in recognizing hazards in rack products.

Important Safety Information

Before installing this product, read the *Important Safety Information* document provided.

Downloaded from www.Manualslib.com manuals search engine

Contents

Downloaded from www.Manualslib.com manuals search engine

Downloaded from www.Manualslib.com manuals search engine

Downloaded from www.Manualslib.com manuals search engine

Downloaded from www.Manualslib.com manuals search engine

Component Identification

In This Section

Components

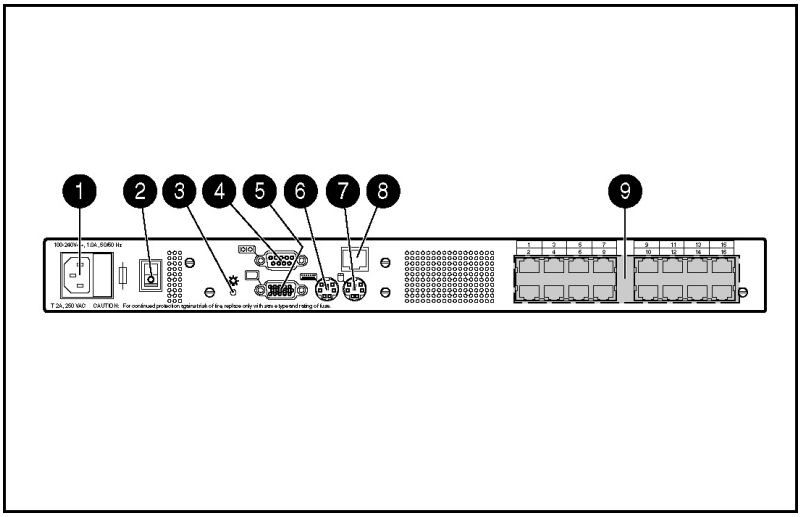

Item	Description
1	Power cord connector
2	Power switch
3	Activity indicator light
4	Serial port
5	Monitor connector for local user
6	Keyboard connector for local user
7	Mouse connector for local user
8	LAN connector
9	Server connection ports

Downloaded from www.Manualslib.com manuals search engine

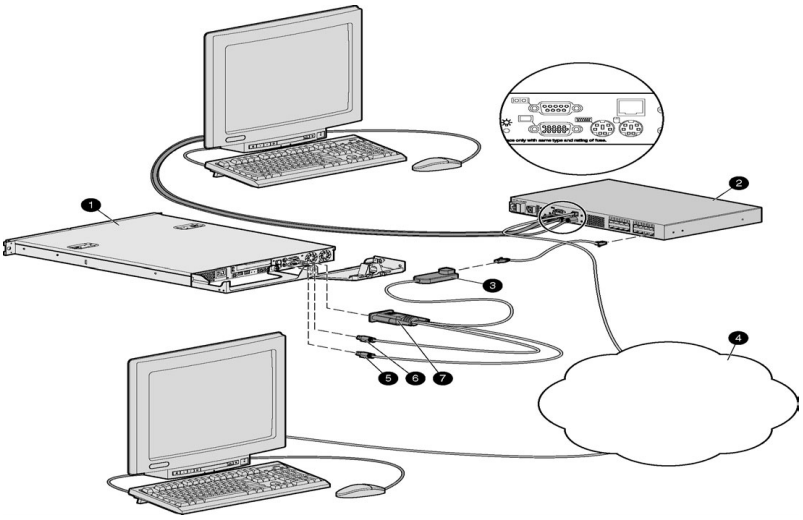

Item	Description
1	CPU
2	HP IP Console Switch
3	IA
4	Network
5	Keyboard connector
6	Mouse connector
7	Video connector

Downloaded from www.Manualslib.com manuals search engine

Installing the HP IP Console Switch

In This Section

Overview

You must install the HP IP Console Viewer before using the HP IP Console Switch. The HP IP Console Viewer enables you to view and control a server attached to the console switch system, configure and maintain the system, and prevent unauthorized access to the console switch through IP connection. For more information, refer to the *HP IP Console Switch Software Guide* included on the CD provided with the console switch.

> **NOTE:** The analog port does not require the HP IP Console Viewer software for operation. The analog port uses the OSD. For more information, refer to Local Port Operation (on page 45, "Overview" on page 45).

The HP IP Console Switch system uses Ethernet networking infrastructures and TCP/IP protocol to transmit keyboard, video, and mouse information between operators and connected computers. Although 10Base-T Ethernet can be used, a dedicated, switched 100Base-T network provides improved performance.

Installation Checklist

Before installation, refer to the following lists to be sure that all of the listed components were received.

Kit Contents

- HP IP Console Switch

Downloaded from www.Manualslib.com manuals search engine

- Power cords
- Rack mounting kit
- Serial download cable
- Documentation kit
- Firmware/software CD

Required Items Not Included

- PS/2 Interface Adapter or USB Interface Adapter
- UTP CAT5 cable (CAT6 and CAT7 may also be used)

Optional Items

- Expansion Module ("Installing the Expansion Module" on page 21)
- Serial Interface Adapter

Required Tools

The following tools are required for some procedures:

- Phillips screwdriver
- T-25 Torx screwdriver

Rack Mounting the HP IP Console Switch

The HP IP Console Switch ships with rack mounting brackets for easy integration into the rack. Before installing the HP IP Console Switch and other components in the rack cabinet (if not already installed), stabilize the rack in a permanent location. Begin installing the equipment at the bottom of the rack cabinet, then work to the top. Avoid uneven loading or overloading of the rack cabinets.

Downloaded from www.Manualslib.com manuals search engine

NOTE: Before installing the HP IP Console Switch into the rack, connect the HP IP Console Switch to a power source, using the power cords provided, and power on the unit. An activity indicator light ("Components" on page 7) is displayed after a few seconds. If the activity indicator light does not display, be sure that the power is on, the power cord is connected, and the power source is valid.

Several rack mounting configurations include:

- Side-mount
  - Type A—Square- and round-hole rails
  - Type B—Square-hole rails

    NOTE: The HP IP Console Switch cannot be side-mounted into a rack with round-hole rails.
- Standard-mount
- Cantilever-mount
  - Type A—Round-hole rails
  - Type B—Square-hole rails

Performing a Side-Mount Type A Installation

1. Remove the four screws, two on each side, from the console switch.

Downloaded from www.Manualslib.com manuals search engine

2. Attach the side-mounting brackets to the console switch using the four screws you removed.

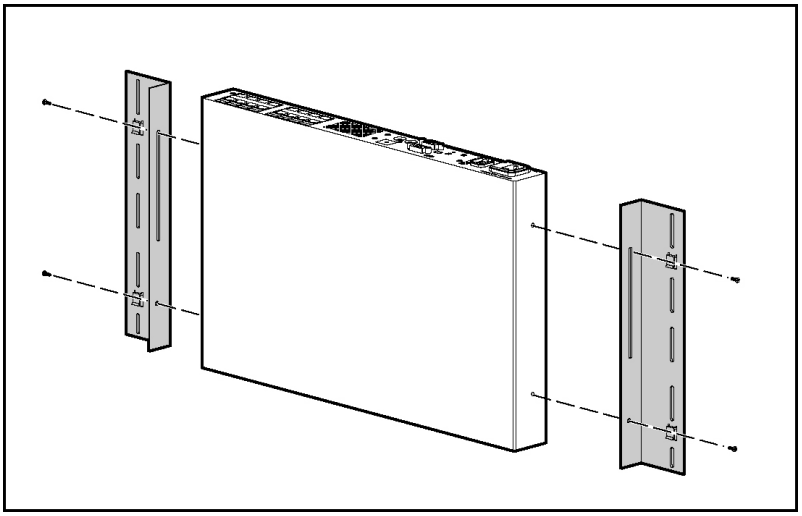

3. Slide the side-mounting bracket tabs into the U locations on each side of the rack.

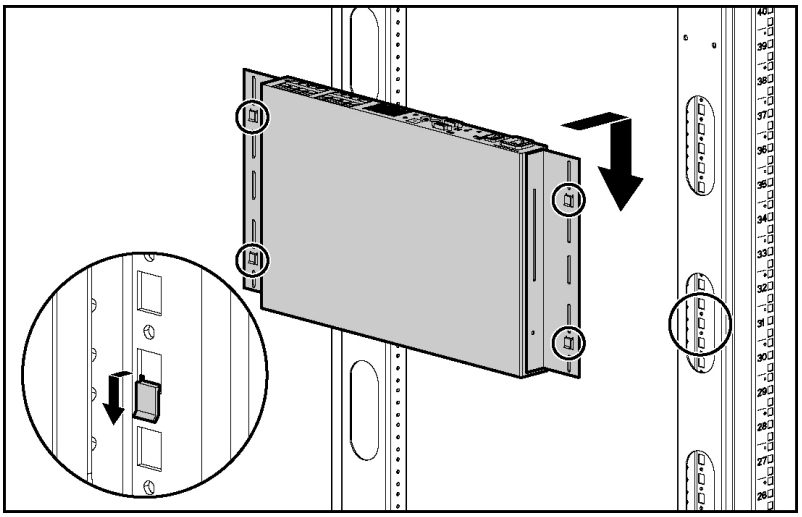

Downloaded from www.Manualslib.com manuals search engine

4. Secure the console switch to the rails using four self-tapping screws, two on each side.

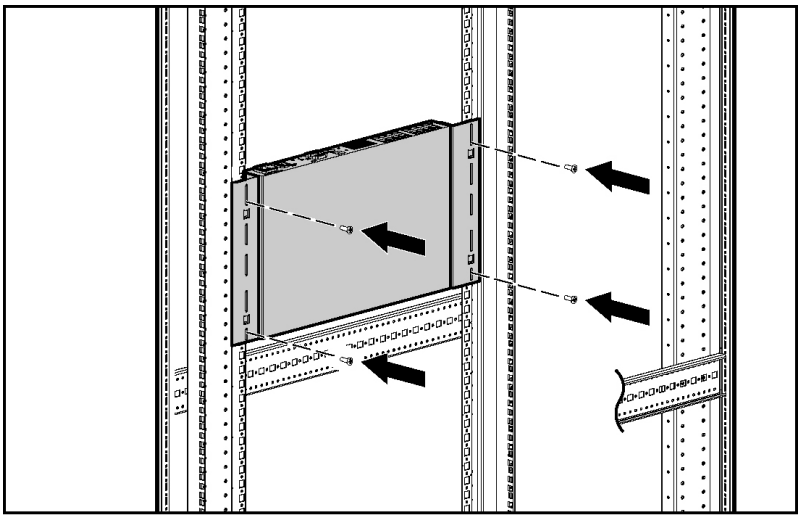

Performing a Side-Mount Type B Installation

1. Remove the four screws, two on each side, from the console switch.
2. Attach the side-mounting brackets to the console switch using the four screws you removed.

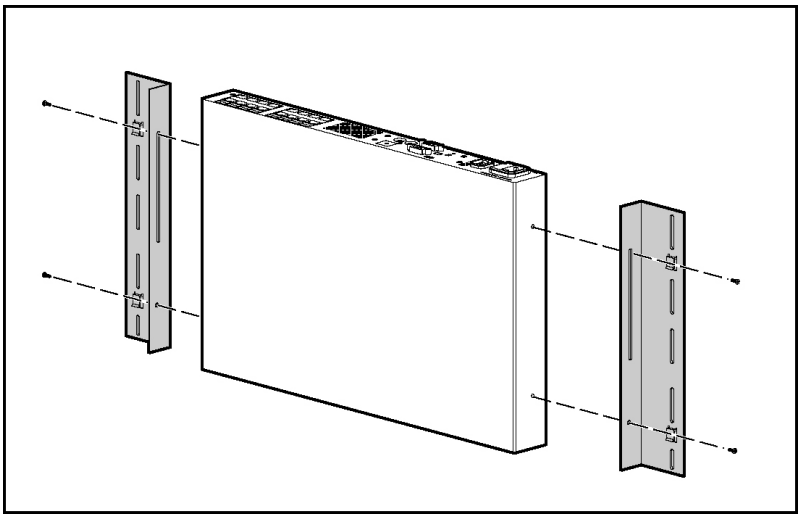

Downloaded from www.Manualslib.com manuals search engine

3. Slide the side-mounting bracket tabs into the U locations on each side of the rack.

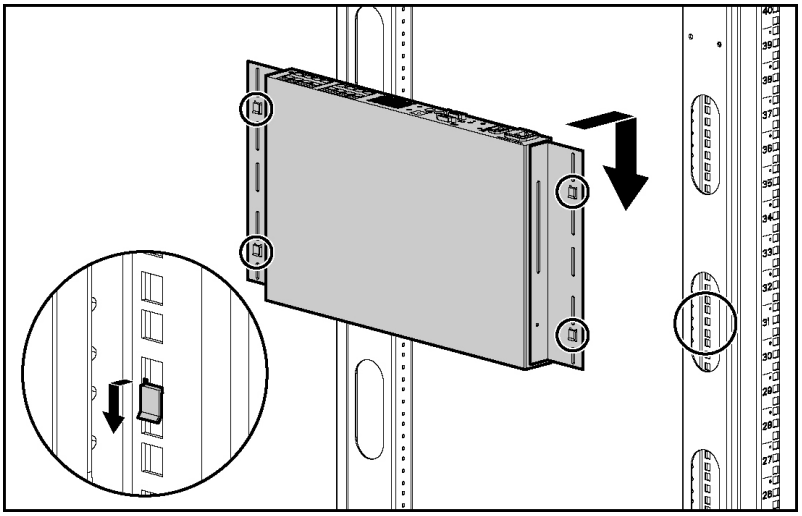

4. Install four cage nuts into the side-mounting bracket U locations.

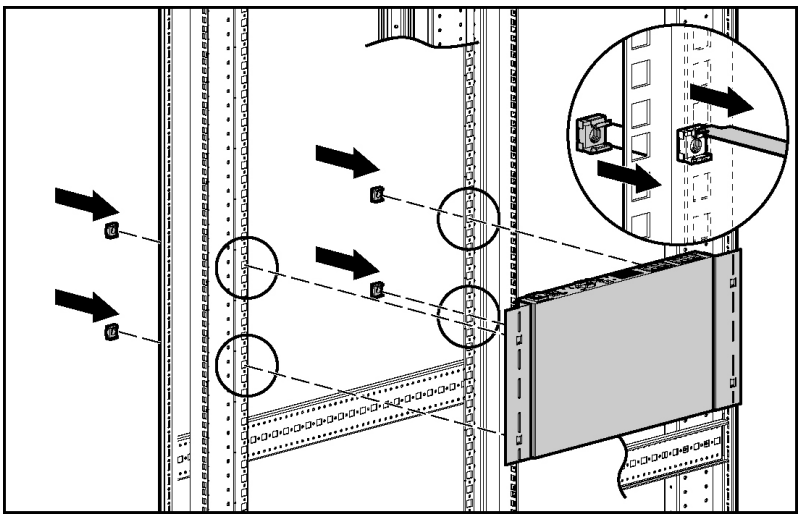

5. Secure the console switch to the rails, using four M-6 screws, two on each side.

Performing a Standard-Mount Installation

1. Remove the four screws, two on each side, from the console switch.

Downloaded from www.Manualslib.com manuals search engine

2. Attach the 1U brackets to the console switch using the four screws you removed.

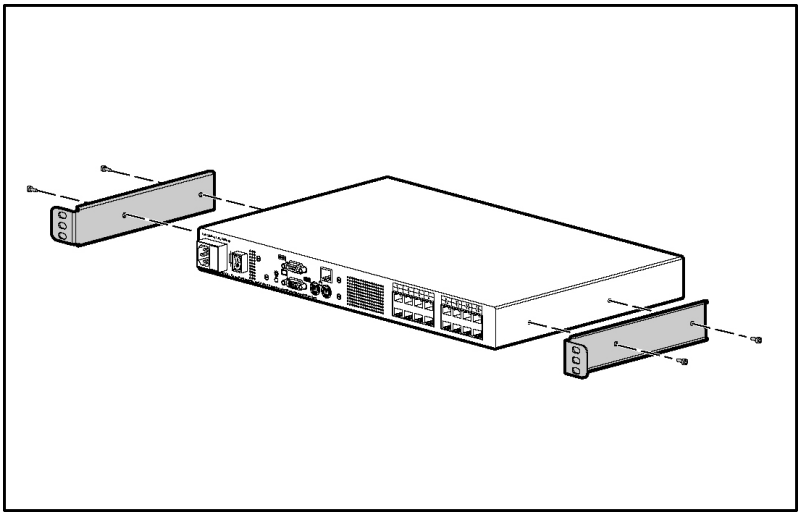

3. Install a cage nut behind each rear rail if they have not already been installed.
4. Slide the console switch into the rear of the 1U product.

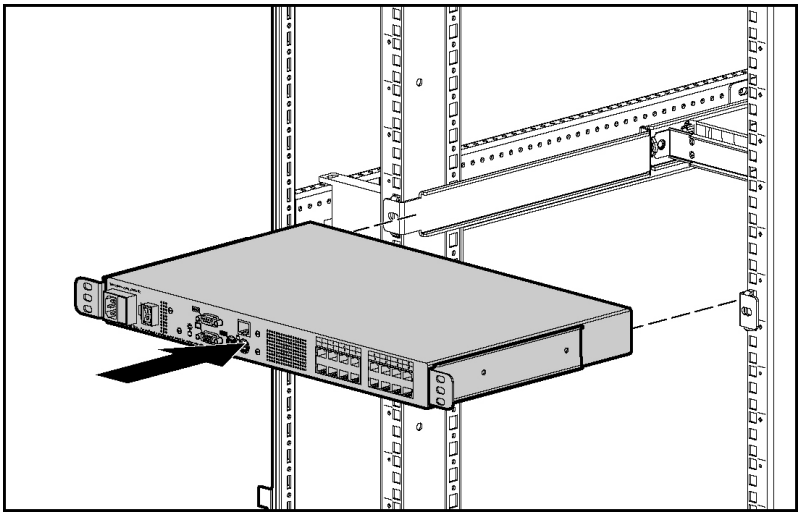

Downloaded from www.Manualslib.com manuals search engine

5. Secure the console switch to the rails using two M-6 screws, one on each side.

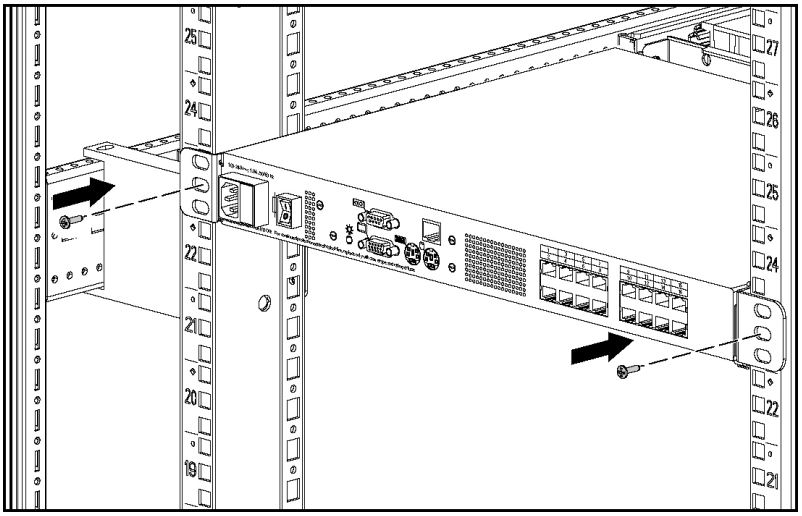

Performing a Cantilever-Mount Type A Installation

1. Remove the four screws, two on each side, from the console switch.
2. Attach the 1U brackets to the console switch using the four screws you removed.

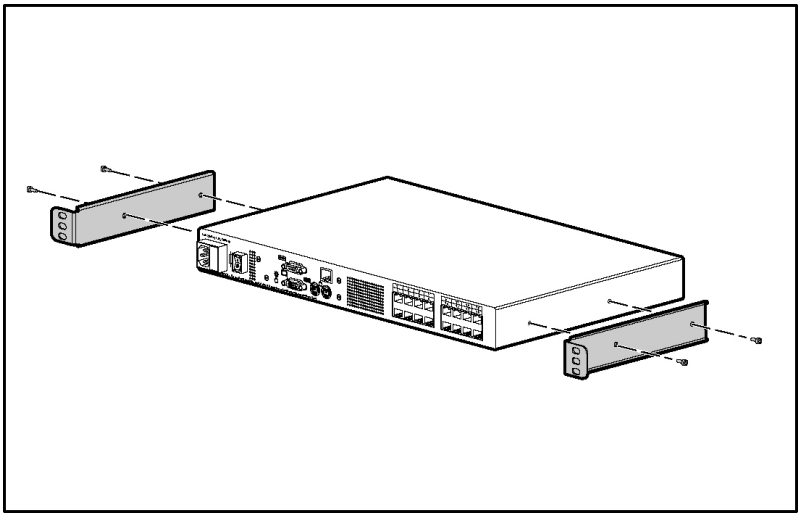

Downloaded from www.Manualslib.com manuals search engine

3. Install up to six clip nuts.

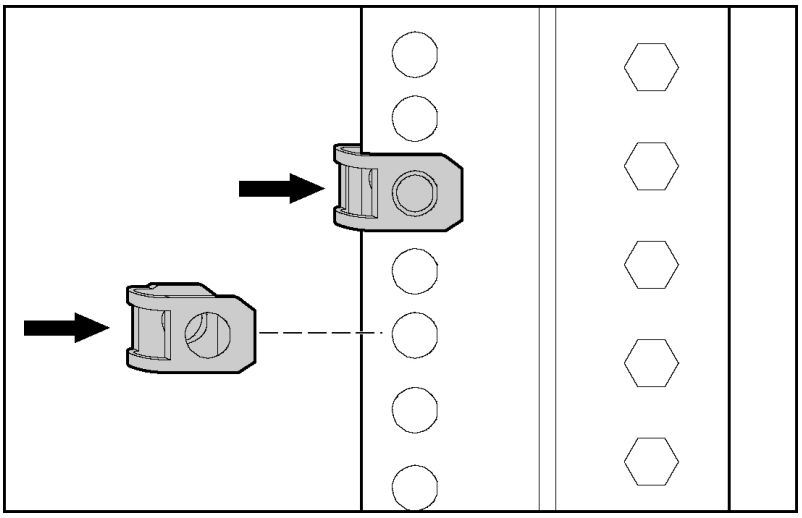

4. Secure the console switch to the rails, using the appropriate number of T-25 Torx screws.

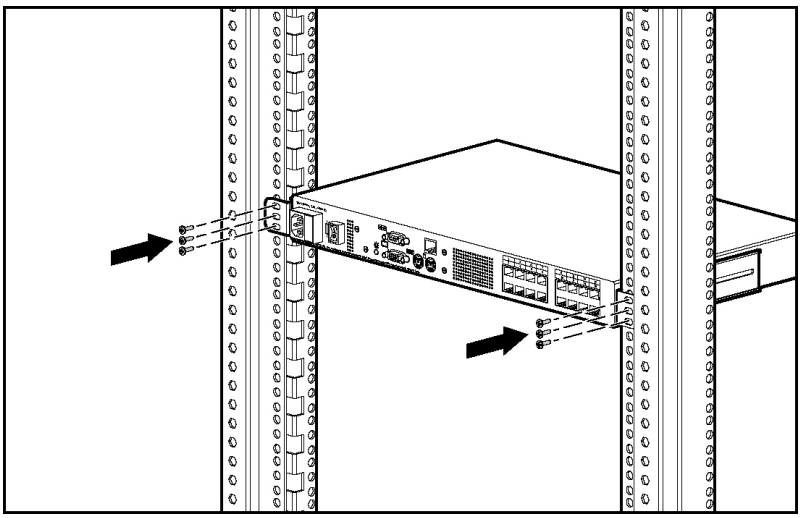

Performing a Cantilever-Mount Type B Installation

1. Remove the four screws, two on each side, from the console switch.

Downloaded from www.Manualslib.com manuals search engine

2. Attach the 1U brackets to the console switch using the four screws you removed.

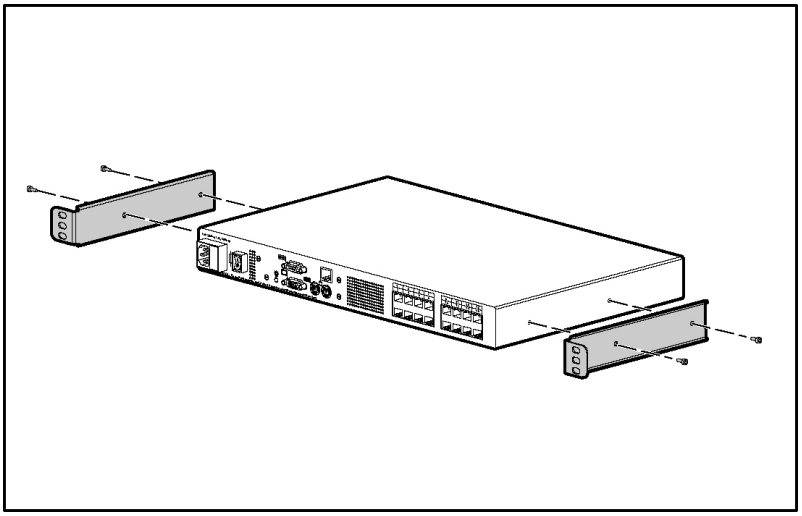

3. Install up to six cage nuts.

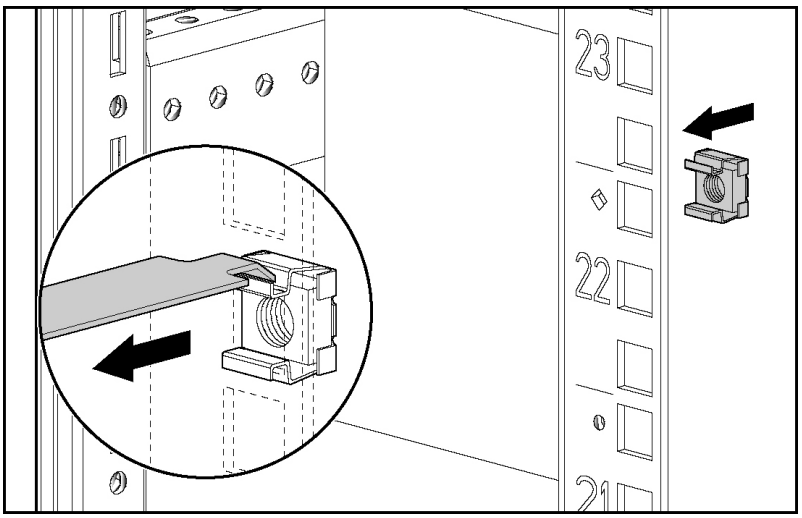

Downloaded from www.Manualslib.com manuals search engine

4. Secure the console switch to the rails using the appropriate number of M-6 screws.

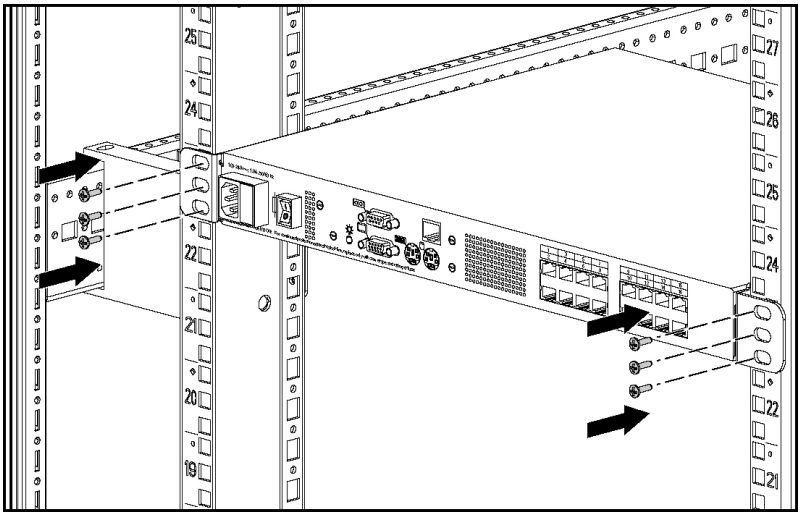

Downloaded from www.Manualslib.com manuals search engine

Downloaded from www.Manualslib.com manuals search engine

Installing the Expansion Module

In This Section

Overview

An optional Expansion Module can be added to the HP IP Console Switch system, increasing the total number of accessible servers. The Expansion Module ships with rack-mounting hardware for easy integration into the rack.

Installation Checklist

Before installation, refer to the following list to be sure that all of the listed components were received.

Kit Contents

- Expansion Module
- Screws
- Velcro

This kit might contain extra hardware for your convenience.

Installing the Expansion Module Hardware

Several rack mounting configurations include:

- Side-mount

Downloaded from www.Manualslib.com manuals search engine

- Rail-mount
- Velcro-mount

Performing a Side-Mount Installation

1. Slide the tabs on the side-mounting brackets into the rack frame.

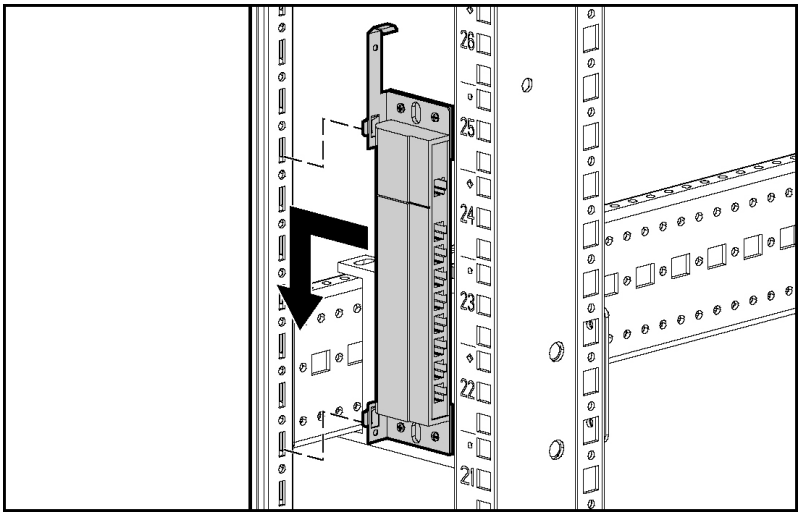

2. Secure the Expansion Module to the rack frame, using one self-tapping screw for the bottom side-mounting bracket.

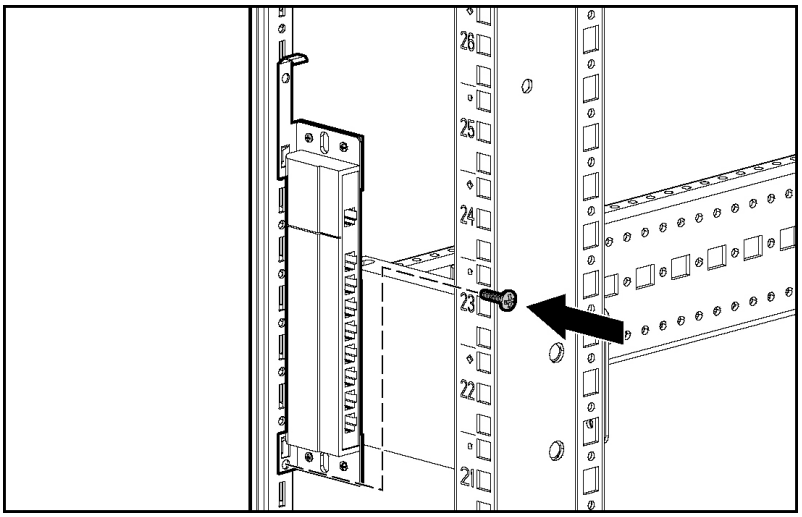

Downloaded from www.Manualslib.com manuals search engine

Performing a Rail-Mount Installation

1. Remove the screws securing the side-mounting brackets to the Expansion Module.

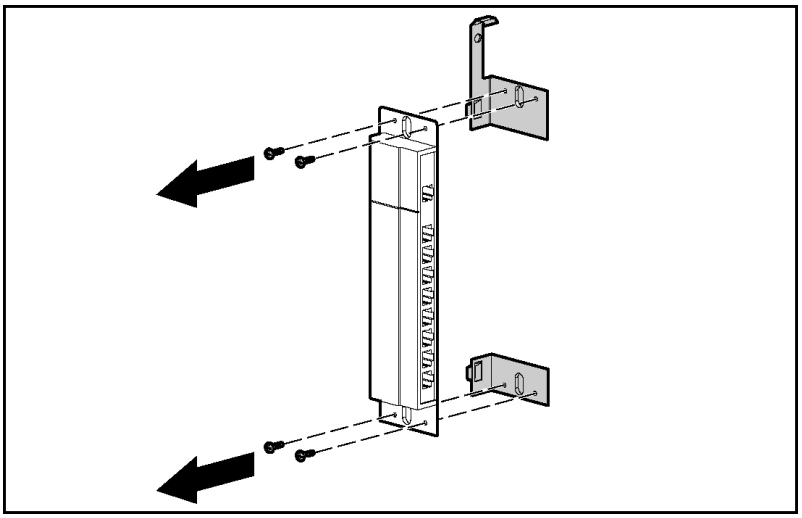

2. Insert two cage nuts into the rack frame where the side-mounting bracket holes are located and secure the Expansion Module to the rack frame, using two M-6 screws.

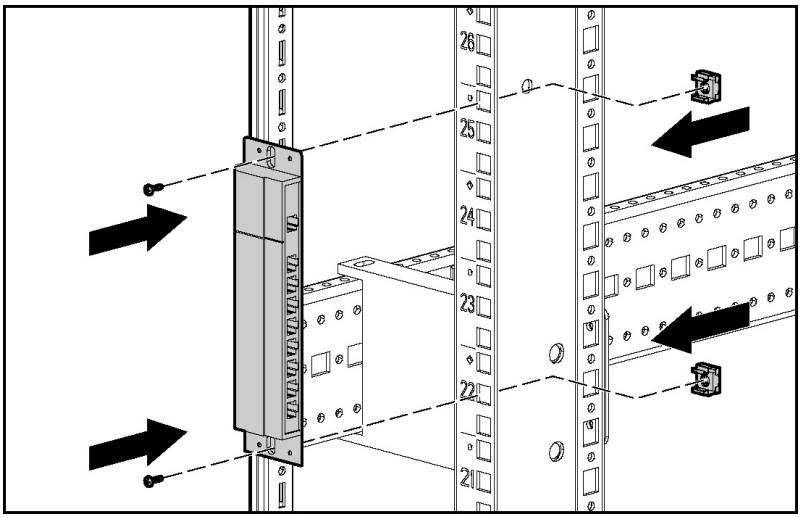

Downloaded from www.Manualslib.com manuals search engine

Performing a Velcro-Mount Installation

1. Determine the location for the Expansion Module.
2. Remove the protective strip from one side of the Velcro and attach that side to the Expansion Module.
3. Remove the protective strip from the other side of the Velcro and attach the Expansion Module to the rack frame.

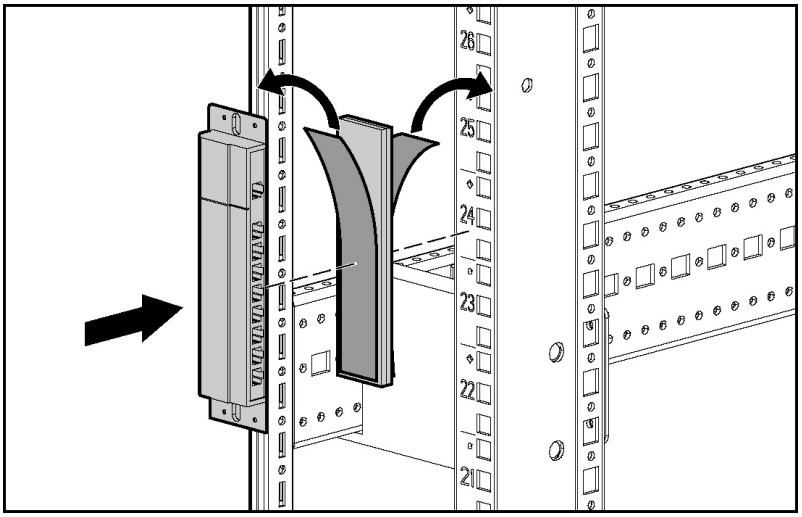

Configuring the Expansion Module

1. Mount the Expansion Module into the rack.
2. Locate up to nine UTP CAT5 cables.
3. Connect a UTP CAT5 cable to the server connection port ("Components" on page 7) on the HP IP Console Switch.
4. Connect the other end of that same UTP CAT5 cable to the IN port on the Expansion Module.
5. Connect one end of another UTP CAT5 cable to the OUT port on the Expansion Module.
6. Connect the other end of the second UTP CAT5 cable to the Interface Adapter.
7. Repeat steps 5 and 6 to connect any other servers to this system.

Downloaded from www.Manualslib.com manuals search engine

Installing a PS/2 or USB Interface Adapter

In This Section

Overview

An Interface Adapter is required for the HP IP Console Switch system to function properly. However, it is not included in the HP IP Console Switch kit. An Interface Adapter connects UTP CAT5 cables to PS/2 or USB connections, establishing a KVM session to a server.

NOTE: UTP CAT5 cables are used throughout the examples in this guide. However, UTP CAT6 and UTP CAT7 cables may also be used.

Configuring the Interface Adapter

1. Connect a UTP CAT5 cable to the server connection port ("Components" on page 7) on the HP IP Console Switch.
2. Connect the other end of that same UTP CAT5 cable to the RJ-45 port on the Interface Adapter.
3. Connect the Interface Adapter to the appropriate ports on the server.
4. Repeat the preceding steps to connect any other servers to this system.

The following figure shows one possible configuration for the HP IP Console Switch system with an Interface Adapter.

Downloaded from www.Manualslib.com manuals search engine

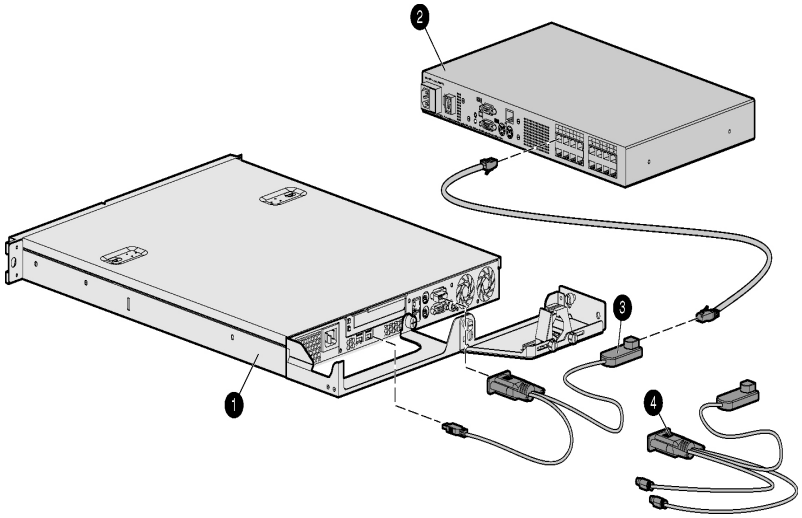

Item	Description
1	Server
2	HP IP Console Switch
3	USB Interface Adapter
4	PS/2 Interface Adapter

Downloaded from www.Manualslib.com manuals search engine

Installing a Serial Interface Adapter

In This Section

Overview

The HP Serial Interface Adapter is a serial-to-VGA converter, which permits VT100–capable devices to be viewed from the local ports of the HP IP Console Switch and HP KVM Server Console Switch, or by using the HP IP Console Viewer software. The serial data is not accessed but is displayed. All serial data coming from the target device is displayed in a VT100 window, placed into a video buffer, and sent to the console switch as though it came from a VGA server. Keystrokes entered on a keyboard are sent to the attached device as though they were entered into a VT100 terminal.

Downloaded from www.Manualslib.com manuals search engine

Installing the Serial Interface Adapter

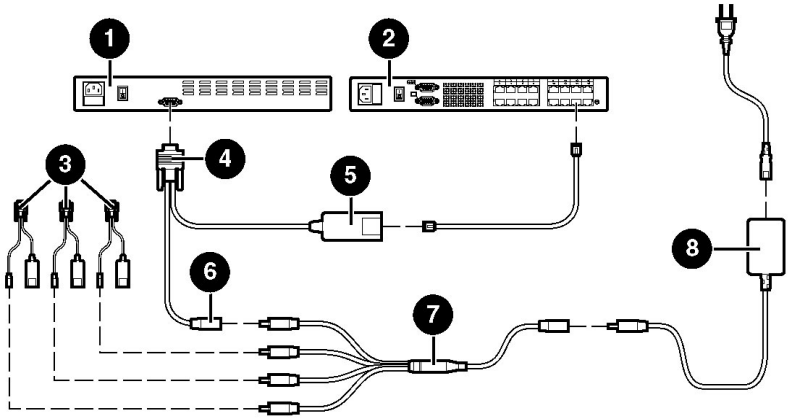

Item	Description
1	Serial device (target server)
2	Console Switch
3	Additional serial interface adapter
4	Serial interface adapter 9–pin connector
5	Serial interface adapter RJ-45 connector
6	Serial interface adapter power connector
7	Power expander
8	Power supply

1. Power up the console switch.
2. Connect the serial interface adapter 9–pin connector (4) to the serial device (1).
3. Connect the serial interface adapter (5) to the console switch (2) using a CAT5 cable.
4. Connect the power supply (8) to either a power expander (7) or directly to the serial interface adapter (6).

Downloaded from www.Manualslib.com manuals search engine

If you are using a power expander (7), connect it to up to three additional serial interface adapters (3).

NOTE: Do not power more than four serial interface adapters from a single power supply.

5. Repeat steps 2 through 4 to connect additional serial devices to the console switch.
6. Connect the power supply (8) to an appropriate AC outlet.
7. Power up the serial device.

Optimal Performance Settings

The following settings are required for optimal serial interface adapter performance:

- Flow Control is required to ensure reliable data flow. Buffer overflows might cause a loss of communication, which might require a power cycling of the serial interface adapter. Set the flow control on the target device, if available, to match the serial interface adapter. If the target device does not support flow control, use the lowest baud rate available.
- VT100 Terminal Emulation is the only emulation supported. Be sure your target device is configured for VT100 terminal emulation.
- Automatic Video Adjust is required to optimize video settings. When using the HP IP Console Viewer software to connect to a serial interface adapter, using the Remote Video Session, perform an automatic video adjust **(Tools>Automatic Video Adjust).**

Serial Interface Adapter Modes

The following modes can be accessed through the serial interface adapter:

- Online Mode—This mode enables you to send and receive serial data.
- History Mode—This mode enables you to examine the contents of the history buffer, which contains the events that have occurred.

Downloaded from www.Manualslib.com manuals search engine

- Configuration Mode—This mode enables you to specify communication parameters, the appearance of serial data, and key combinations for specific actions and macros.

History Mode

The serial interface adapter maintains a buffer containing 240 lines minimum, or 10 screens, of output. When the history buffer is full, it adds new lines at the bottom of the buffer and deletes the oldest lines at the top of the buffer.

Using History Mode

1. Press the **Ctrl+F9** keys. The mode appears as History.
2. Press one of the following key combinations to perform the indicated action:
   - Home—Move to the top of the buffer
   - End—Move to the bottom of the buffer
   - Page Up—Move down one buffer page
   - Page Down—Move down one buffer page
   - Up Arrow—Move up one buffer line
   - Down Arrow—Move down one buffer line
   - Ctrl+F8—Enter Configuration mode (the Configuration menu appears)
   - Ctrl+F9—Return to the previous screen with History mode enabled
   - Ctrl+F10—Return to the previous screen with Online mode enabled
   - Ctrl+F11—Clear the history buffer (if you choose this option, a warning screen appears. Press the **Enter** key to delete the history buffer, or the **Esc** key to cancel the action. The previous screen appears again)
3. When finished, press the **Ctrl+F10** keys to exit History mode and return to Online mode.

Downloaded from www.Manualslib.com manuals search engine

Configuration Mode

Press the **Ctrl+F8** keys to activate the Configuration menu. The Configuration menu contains menu items that enable you to configure your serial interface adapter.

Communication Parameters

The following communication parameters can be changed through the Configuration Mode:

- Baud Rate—This option enables you to specify the serial port communication speeds in bits per second (BPS). Available options are 300, 1200, 2400, 9600, 19200, 34800, 57600, or 115200. The default value is 9600.
- Parity—This option enables you to specify the serial port communications parity. Available options are EVEN, ODD, or NONE. The default value is NONE.
- Flow Control—This option enables you to specify the type of serial flow control. Available options are NONE, XOn/XOff (software), and RTS/CTS (hardware). The default value is NONE. If you select a baud rate of 115200, the only available flow control is RTS/CTS (hardware).
- DSR/CD Mode—This option enables you to control how the DSR and CD lines operate. Available options are Always On mode and Toggle mode. When in Toggle mode, the DSR and CD lines are turned off for one-half second and then turned on each time a module is selected or deselected. The default value is Always On mode.
- Enter Sends—This option enables you to specify the keys that are transmitted when the Enter key is pressed. Available options are <CR> (Enter) or <CR><LF> (Enter—Linefeed).
- Received—This option enables you to specify how the serial interface adapter translates a received Enter. Available options are <CR> (Enter) or <CR><LF> (Enter—Linefeed).
- Background—This option changes the color of the background screen. The currently selected color displays in the option line as it is changed. This color cannot be identical to the Normal Text or Bold Text color.

Downloaded from www.Manualslib.com manuals search engine

- Normal Text—This options changes the normal text color of the screen. The currently selected color displays in the option line as it is changed. This color cannot be identical to the Bold Text or Background color.
- Bold Text—This options changes the bold text color of the screen. The currently selected color displays in the option line as it is changed. This color cannot be identical to the Normal Text or Background color.
- Screen Size—This option enables you to specify the text width size of the screen. Available widths are 80 columns or 132 columns. The length for both widths is 26 lines.

Function Keys

The following options of the Configuration menu enable you to define the function keys that perform selected actions.

To specify a new function key, press and hold the **Ctrl** key, then press the function key that you want to associate with the action. For example, if you want to change the Config Key Sequences option from Ctrl+F8 to Ctrl+F7, press and hold the **Ctrl** key and then press the **F7** key.

- Config Key Sequences—This options enables you to define the key combination that causes the Configuration screen to appear.
- Online Key Sequence—This option enables you to define the key sequence that displays the Online mode. The default key sequence is Ctrl+F10.
- Help Key Sequence—This option enables you to define the key combination that displays the Help System screen. The default key sequence is Ctrl+F1.
- History Key Sequence—This option enables you to define the key combination that enables History mode. The default key sequence is Ctrl+F9.
- Clear History Key Sequence—This option enables you to define the key combination that clears the history buffer while in History mode. The default key is Ctrl+F11.
- Break Key Sequence—This options enables you to configure the key combination that generates a break condition. The default key sequence is Alt+B.

Downloaded from www.Manualslib.com manuals search engine

Using Configuration Mode

1. Press the **Ctrl+F8** keys. The Configuration screen appears.
2. Select a parameter to change. You can navigate the configuration screen using the up arrow and down arrow.
3. Modify the selected value using the left arrow and right arrow.
4. Repeat steps 2 and 3 to modify additional values.
5. Press the **Enter** key to save you changes and exit.

   -or-

   Press the **Esc** key to exit the configuration screen without saving the changes.

Serial Interface Adapter Macros

Press the **Page Down** key when the Configuration menu appears to provide access to the Macro Configuration screen. The serial interface adapter can be configured with up to 10 macros. Each macro can be up to 128 characters in length.

Creating Macros

1. Select the serial interface adapter you want to configure and press the **Ctrl+F8** keys. The Configuration menu appears.
2. Press the **Page Down** key. The Macro Configuration screen appears. The Macro Configuration screen displays the 10 available macros and the associated key sequences.
3. Using the Arrow keys, scroll to an available macro number and highlight the listed keystroke sequence.
4. Enter the new macro sequence over the default. Any combination of Ctrl or Alt and a single key can be used.
5. When you have finished entering the keystroke sequences that activate the new macro, press the down arrow key.
6. On the line below the macro keystroke sequence just entered, enter the keystroke sequence that you want the macro to perform.
7. Repeat this sequence for each macro that you want to configure.

Downloaded from www.Manualslib.com manuals search engine

8. When finished, press the **Enter** key to return to the Terminal screen.

Serial Interface Adapter Pinouts

The serial interface adapter is a DCE device. The following table lists the pinouts for the serial interface adapter.

DB9F Pin	Serial Interface Adapter Description
1	Data Terminal Ready (DTR) Pins 6 and 1 are tied common internal to the serial interface idapter.
2	Transmit Data (TXD)
3	Receive Data (RXD)
4	Data Set Ready (DSR)
5	Signal Ground (GND)
6	Data Terminal Ready (DTR)
7	Clear to Send (CTS)
8	Request to Send (RTS)
9	Not Connected (N/C)

Attaching the Power Supply to the Rack Using Velcro

1. Determine the location for the power supply.
2. Remove the protective strip from one side of the Velcro and attach that side to the power supply.

Downloaded from www.Manualslib.com manuals search engine

3. Remove the protective strip from the other side of the Velcro and attach the power supply to the rack frame.

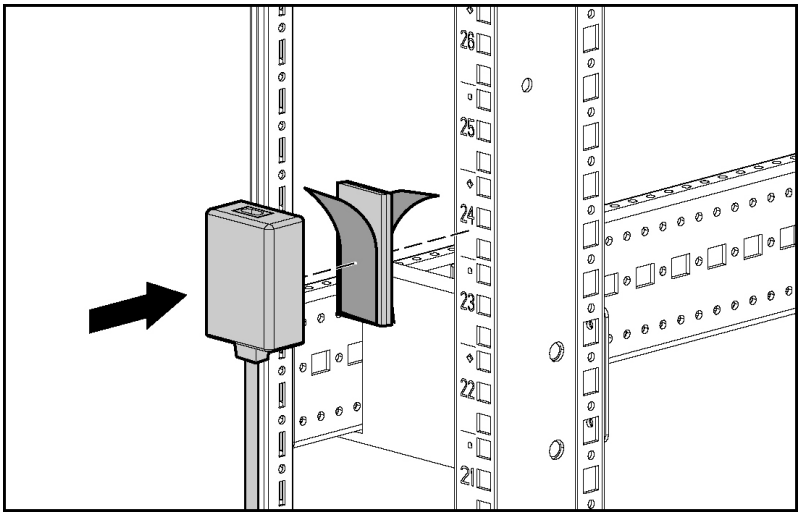

Downloaded from www.Manualslib.com manuals search engine

Downloaded from www.Manualslib.com manuals search engine

Cascading Console Switches

In This Section

Compatible Console Switch Models

Review the following information before cascading console switches with this product.

This product supports only one level of cascading. An Expansion Module is considered a level of cascading and therefore cannot be used in combination with cascaded console switches.

To ensure optimum equipment performance while cascading console switches, follow the proper powering-on sequence—power on the console switches, monitor, and then servers.

NOTE: The HP IP Console Switch does not support Compaq KVM PCI Cards or HP legacy console switches.

Compaq Server Console Switch

CAUTION: While cascading a 2 x 8 Compaq Server Console Switch, connect only one Interface Adapter at any given time. Undesirable operations might occur if multiple Interface Adapters are attached.

CAUTION: While cascading console switches, be sure that the Compaq Server Console Switch is cascaded below the HP IP Console Switch. Undesirable operations might occur if these specific cascading sequences are not followed.

Downloaded from www.Manualslib.com manuals search engine

The following Compaq Server Console Switches can be integrated into the HP IP Console Switch system. Compatible Compaq Server Console Switch models include:

- 1 x 4 [PN: 400336 (-001)(-291)(-B31)]
- 1 x 8 [PN: 400337 (-001)(-291)(-B31)]
- 2 x 8 [PN: 400338 (-001)(-291)(-B31)]
- 2 x 8 48 VDC [PN: 400542 -B21]

All Compaq Server Console Switches must be upgraded with SoftPaq firmware, version 2.1.0 or later, when cascaded with this product.

HP KVM Server Console Switch

CAUTION: Do not use Interface Adapters to cascade HP IP Console Switches with HP KVM Server Console Switches. If Interface Adapters are used to cascade these products, undesirable operations might occur.

CAUTION: While cascading console switches, be sure that the HP KVM Server Console Switch is cascaded below the HP IP Console Switch. Undesirable operations might occur if these specific cascading sequences are not followed.

NOTE: To perform a firmware upgrade for a cascaded HP KVM Server Console Switch and all attached Interface Adapters, you must locally connect the keyboard, monitor, and mouse to the cascaded HP KVM Server Console Switch to access the local OSD.

The following HP KVM Server Console Switches can be integrated into the HP IP Console Switch system. Compatible HP KVM Server Console Switch models include:

- 1 x 8 [PN: 336044 (-B21)]
- 2 x 16 [PN: 336045 (-B21)]

All HP KVM Console Switches must be upgraded with SoftPaq firmware, version 2.0.6 or later, when cascaded with this product.

Downloaded from www.Manualslib.com manuals search engine

Cascading a Compaq Server Console Switch with an HP IP Console Switch

1. Mount the console switches in the rack.
2. Connect the local port KVM cable to the HP IP Console Switch.
3. Connect a UTP CAT5 cable to the server connection port ("Components" on page 7) on the HP IP Console Switch.
4. Connect the other end of that same UTP CAT5 cable to the RJ-45 port on the Interface Adapter.
5. Connect the Interface Adapter to the IN port (designated by the letter A) on the Compaq Server Console Switch.
6. Connect a KVM cable to the numbered OUT port on the Compaq Server Console Switch.
7. Connect the other end of that same KVM cable to the appropriate port on the server.
8. Repeat steps 3 through 7 for any other console switches to be added to this system.
9. Power on the console switches.
10. Power on the monitor.
11. Power up the server.

Downloaded from www.Manualslib.com manuals search engine

The following figure shows a Compaq Server Console Switch cascaded to an HP IP Console Switch. The top console switch is the main console switch, while the bottom console switch is the cascaded console switch.

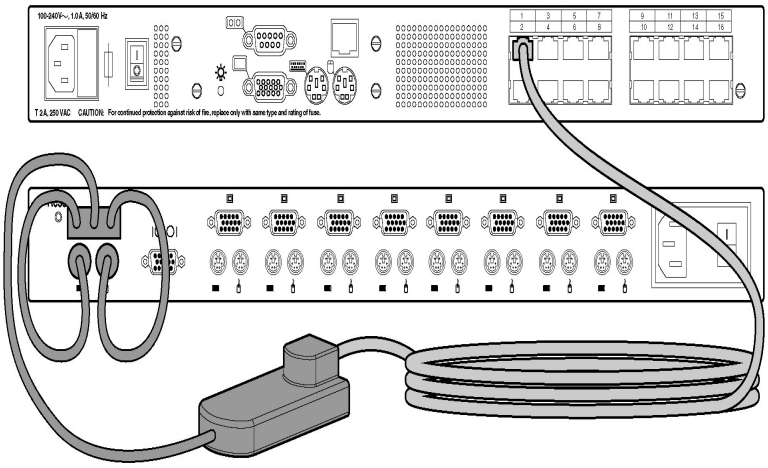

Example of a Compaq Server Console Switch Cascade Configuration

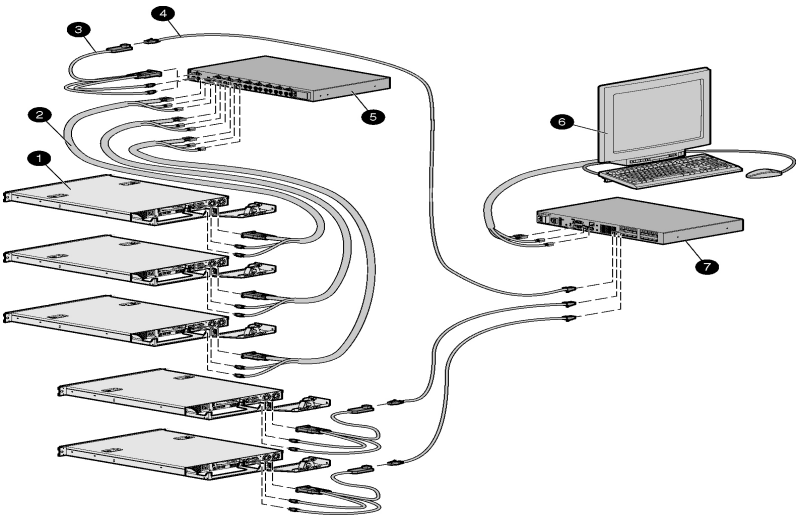

Downloaded from www.Manualslib.com manuals search engine

Item	Description
1	Server
2	KVM cable
3	PS/2 Interface Adapter
4	UTP CAT5 cable
5	Cascaded Compaq Server Console Switch
6	Local port
7	Main HP IP Console Switch

Cascading an HP KVM Server Console Switch with an HP IP Console Switch

NOTE: To perform a firmware upgrade for a cascaded HP KVM Server Console Switch and all attached Interface Adapters, you must locally connect the keyboard, monitor, and mouse to the cascaded HP KVM Server Console Switch to access the local OSD.

1. Mount the console switches in the rack.
2. Locate a UTP CAT5 cable and connect one end to the server connection port ("Components" on page 7) on the cascaded HP KVM Server Console Switch.
3. Connect the other end of that same UTP CAT5 cable to the RJ-45 port on the Interface Adapter.
4. Connect the Interface Adapter to the appropriate ports on the server.
5. Repeat steps 1 through 3 for any other servers to be added to this system.
6. Connect the local port KVM cable to the cascaded HP KVM Server Console Switch.
7. Power on the cascaded HP KVM Server Console Switch.
8. Power on the monitor.
9. Power up the server.
10. Update the cascaded HP KVM Server Console Switch firmware.
11. Update all Interface Adapter firmware.

Downloaded from www.Manualslib.com manuals search engine

12. Power off the cascaded HP KVM Server Console Switch.
13. Power off the monitor.
14. Disconnect the local KVM cables from the cascaded HP KVM Server Console Switch.
15. Connect the local port KVM cable to main HP IP Console Switch.
16. Connect a UTP CAT5 cable to the server connection port ("Components" on page 7) on the main HP IP Console Switch.
17. Connect the other end of that same UTP CAT5 cable to the RJ-45 interface port ("Components" on page 7) on the cascaded HP KVM Server Console Switch.
18. Repeat steps 15 and 16 for any other console switches to be added to this system.
19. Power on the console switches.
20. Power on the monitor.
21. Update the main HP IP Console Switch firmware (refer to the HP IP Console Switch documentation).
22. Update all Interface Adapter firmware.

The following figure shows an HP IP Console Switch cascaded to an HP KVM Server Console Switch. The top console switch is the main console switch, while the bottom console switch is the cascaded console switch.

Downloaded from www.Manualslib.com manuals search engine

CAUTION: Do not use Interface Adapters to cascade HP IP Console Switches with HP KVM Server Console Switches. If Interface Adapters are used to cascade these products, undesirable operations might occur.

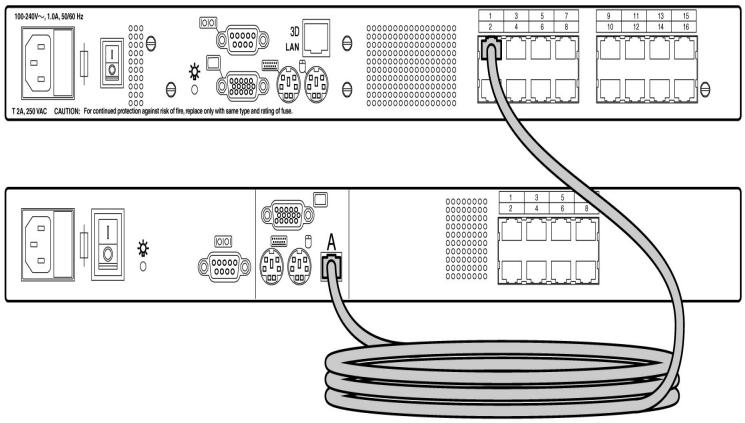

Example of an HP IP Console Switch Cascade Configuration

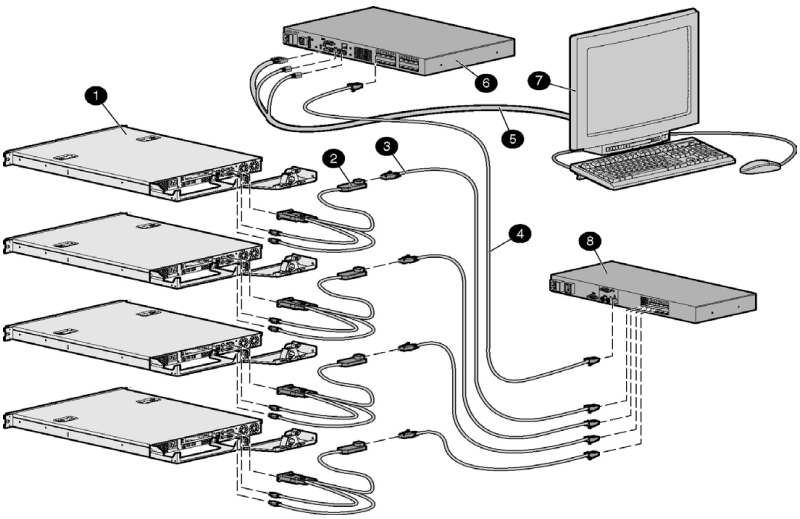

Downloaded from www.Manualslib.com manuals search engine

Item	Description
1	Server
2	PS/2 Interface Adapter or USB Interface Adapter*
3	UTP CAT5 cable
4	UTP CAT5 cable
5	KVM cable
6	Main HP IP Console Switch
7	Local port
8	Cascaded HP KVM Server Console Switch
* not shown	

Downloaded from www.Manualslib.com manuals search engine

Local Port Operation

In This Section

Overview

The HP IP Console Switch system has one local port on the rear panel ("Components" on page 7) that enables the user to connect a keyboard, monitor, and mouse to the HP IP Console Switch for direct access.

Use the Main dialog box ("Accessing the Main Dialog Box" on page 45) to view, configure, and control servers in the HP IP Console Switch system. You can also clear offline Interface Adapters, without having to go to the Diagnostics dialog box, by clicking the **Clear** button.

Accessing the Main Dialog Box

Press the **Print Scrn** key. The Main dialog box appears.

Downloaded from www.Manualslib.com manuals search engine

NOTE: You can also press the **Ctrl** key twice within one second to launch the OSD. You can use this key sequence in any place you see Print Scrn.

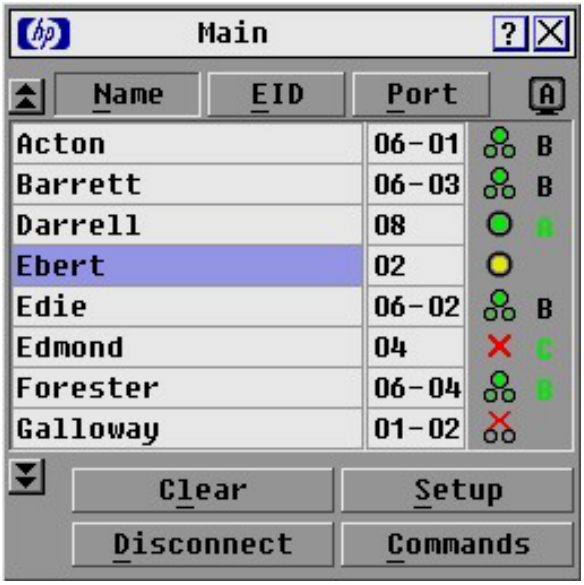

Viewing and Selecting Ports and Servers

You can view servers by name, port, or by the unique EID embedded in each Interface Adapter.

Viewing the Port Column

When the Main dialog box ("Accessing the Main Dialog Box" on page 45) is first launched, an OSD-generated port list is displayed by default.

Downloaded from www.Manualslib.com manuals search engine

The Port column indicates the port to which a server is connected. For example, in the following screen shot, the first number represents the port number of the first console switch and the second number represents the port number of the cascaded console switch port to which the server is connected.

Port
16-01
14-02
01-04
02
02
04
05

Port number of the first console switch	Port number of the cascaded console switch	Server Status Icon displayed	Description
16	01		The server is connected to port 01 of the 1 x 8 HP KVM Server Console Switch, and that HP KVM Server Console Switch is cascaded from port 16 of the first HP KVM Server Console Switch.
14	02	B	The server is connected to port 02 of the 2 x 16 HP KVM Server Console Switch, and that HP KVM Server Console Switch is cascaded from port 14 of the first HP KVM Server Console Switch.
01	04		The server is connected to port 04 of the Compaq Server Console Switch, and that Compaq Server Console Switch is cascaded from port 01 of the first HP KVM Server Console Switch.
02			The servers are connected to an Expansion Module so they are using the same port. You can tell that the Expansion Modules are not cascaded because they do not have the second port numbers.
02			The servers are connected to an Expansion Module so they are using the same port. You can tell that the Expansion Modules are not cascaded because they do not have the second port numbers.

Downloaded from www.Manualslib.com manuals search engine

Port number of the first console switch	Port number of the cascaded console switch	Server Status Icon displayed	Description
04			The server is connected to the first console switch and the Interface Adapter is not connected or the server is powered off.
05			The server is connected to the first console switch and is active.

Viewing the Server Status Column

The status of the servers in the HP IP Console Switch system are indicated by the icons in the right column of the Main dialog box ("Accessing the Main Dialog Box" on page 45).

Item	Description
	The Interface Adapter is connected directly, cascaded through an HP IP Console Switch or an Expansion Module, or powered on.
	The Interface Adapter is not connected or the server is powered off.
	The Interface Adapter is cascaded to a Compaq Server Console Switch and the server is not connected or is powered off.
	The Interface Adapter is cascaded to a Compaq Server Console Switch and the server is connected or is powered on.
	The Interface Adapter is being upgraded.
	A symbol that identifies which port the console switch is connected to.
	A symbol that identifies which port you are actively connected to and viewing.
B (C or D may also appear)	A symbol that identifies a remote session connected to that server.

Downloaded from www.Manualslib.com manuals search engine

Selecting Servers

From the Main dialog box ("Accessing the Main Dialog Box" on page 45), users can select specific servers. When a new server is selected, the console switch reconfigures the KVM to the setting for the selected server.

Double-click the server **Name, EID,** or **Port** number.

-or-

If the display order of the server list is by Port (the Port button is clicked), enter the port number and press the **Enter** key.

-or-

If the display order of the server list is by Name or EID number (the Name or EID button is clicked), enter the first few letters of the name of the server or the EID number to establish it as unique, and then press the **Enter** key.

> **NOTE:** The EID is an electronic identification number, found on the Interface Adapter cable label, automatically assigned to the Interface Adapter.

Selecting Previous Servers

Press the **Print Scrn** key, then press the **Backspace** key. This key combination toggles between the previous and current connection.

Disconnecting from a Server

Press the **Print Scrn** key, then press the **Alt + 0** keys.

-or-

Click **Disconnect.**

This leaves no server selected and in a free state. The status flag ("Controlling the Status Flag" on page 55) on the OSD displays Free.

Downloaded from www.Manualslib.com manuals search engine

Soft Switching

Soft switching is the ability to switch servers using a hotkey sequence. You can soft switch to a server by pressing the **Print Scrn** key and entering the first few characters of its name or number. If you have set a Screen Delay Time and you press the key sequences before that time has elapsed, the OSD does not display.

Configuring Servers for Soft Switching

1. From the Main dialog box ("Accessing the Main Dialog Box" on page 45), click **Setup>Menu.** The Menu dialog box is displayed.
2. For Screen Delay Time, enter the number of seconds of delay desired before the Main dialog box displays after the **Print Scrn** key is pressed.
3. Click **OK** to save settings.

Soft Switching to a Server

To select a server, press the **Print Scrn** key. If the display order of your server list is by Port (the Port button is clicked), enter the port number and press the **Enter** key.

-or-

If the display order of the server list is by Name or EID number (the **Name** or **EID** button is clicked), enter the first few letters of the name of the server or the EID number to establish it as unique, and then press the **Enter** key.

Soft Switching to a Previous Server

Press the **Print Scrn** key, then press the **Backspace** key. This key combination toggles between the previous and current connection.

Downloaded from www.Manualslib.com manuals search engine

Using Basic OSD Navigation Keys

Keystroke	Description
Print Scrn	Opens the OSD Main dialog box. Press the **Print Scrn** key twice to send the **Print Scrn** keystroke to the currently selected device.
F1	Opens the Help screen for the current dialog box.
Esc	Closes the current dialog box without saving changes and returns to the previous dialog box. In the Main dialog box, it closes the OSD and returns to the selected server. In a message box, it closes the pop-up box and returns to the current dialog box.
Alt	Opens dialog boxes, selects options, and executes actions, when used in combination with the other keys.
Alt + X	Closes the current dialog box and returns to the previous dialog box.
Alt + 0	Selects the **OK** button and returns to the previous dialog box.
Enter	Completes the console switch operation in the Main dialog box and exits the OSD.
Single-click, Enter	Selects the text, in a text box, for editing and enables the left and right arrow keys to move the cursor. Press the **Enter** key again to quit Edit mode.
Print Scrn, Backspace	Toggles back to the previous selection if no other keystrokes have been entered.
Print Scrn, Alt + 0	Disengages the user immediately from a server—no server is selected. Status Flag displays Free. (This only applies to the **0** on the keyboard, not the keypad.)
Print Scrn, Pause	Activates the Screen Saver mode immediately and prevents access to that particular console if it is password protected.
Up or **Down** arrows	Moves the cursor from line to line.
Right or **Left** arrows	Moves the cursor between columns. When editing a text box, these keys move the cursor within the column.
Page Up or **Page Down**	Pages up and down through Name and Port lists.
Home or **End**	Moves the cursor to the top or bottom of a list.
Backspace	Erases characters in a text box.
Delete	Deletes current selection in the Scan dialog box or characters in a text box.

Downloaded from www.Manualslib.com manuals search engine

Keystroke	Description
Shift, Delete	Deletes from current selection to all lines below it when editing a scan list.
Numbers	Adds numbers from the keyboard or keypad.
Caps Lock	Disables the user. (Use the **Shift** key to change case.)

Configuring the Setup Dialog Box

You can configure the HP IP Console Switch and manage routine tasks for your servers from the Setup dialog box ("Accessing the Setup Dialog Box" on page 52) within the OSD. Click **Names** when initially setting up your console switch to identify servers by unique names.

Accessing the Setup Dialog Box

From the Main dialog box ("Accessing the Main Dialog Box" on page 45), click **Setup.** The Setup dialog box appears.

Downloaded from www.Manualslib.com manuals search engine

Managing Routine Tasks for Servers

Button	Function
Menu	Changes the server listing between numerically by port or EID number and alphabetically by name. Changes the delay time before the Main dialog box displays after pressing the **Print Scrn** key.
Flag	Changes the display, timing, color, and location of the status flag.
Broadcast	Controls multiple servers simultaneously through keyboard and mouse actions.
Scan	Sets up custom scan patterns for up to 16 servers.
Security	Sets password to restrict server access and enables screen saver. A valid password must be alphanumeric and contain a minimum of five characters and a maximum of 15 characters. Permitted characters are case-sensitive and can consist of A–Z, 0–9, spaces, and hyphens. Enables the Screen Saver mode.
Preempt	Allows the local user to set the Preempt Timeout value.
Keyboard	Changes the keyboard country code reported by the Interface Adapter if queried.
Devices	Identifies device types attached to the HP IP Console Switch, including servers and other console switches.
Names	Allows you to name Interface Adapters.

Changing the Display Behavior

From the Menu dialog box ("Accessing the Menu Dialog Box" on page 54), the display order of servers, HP IP Console Switch connection mode, and a time to delay display of the OSD after pressing the **Print Scrn** key can be changed. The display order setting alters how servers display in several screens, including the Main, Devices, and Broadcast dialog boxes.

Downloaded from www.Manualslib.com manuals search engine

Accessing the Menu Dialog Box

From the Main dialog box ("Accessing the Main Dialog Box" on page 45), click **Setup>Menu.** The Menu dialog box is displayed.

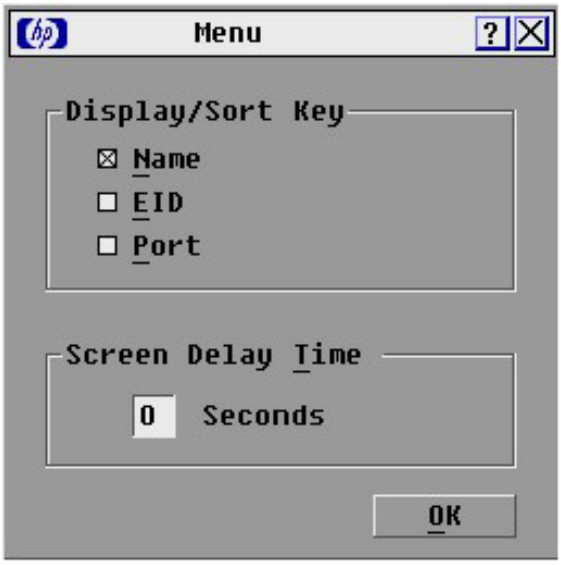

Selecting the Display Order of Servers

1. From the Menu dialog box ("Accessing the Menu Dialog Box" on page 54), select **Name** to display servers alphabetically by name.

   -or-

   Select **EID** to display servers numerically by Interface Adapter ID number.

   -or-

   Select **Port** to display servers numerically by port number.

2. Click **OK** to save settings.

   -or-

   Click **X** to exit, or press the **Esc** key to exit without saving settings.

Downloaded from www.Manualslib.com manuals search engine

Setting a Screen Delay Time

Setting a time to delay the display of the OSD enables you to complete a soft switch ("Soft Switching" on page 50) without displaying the OSD. It is strongly recommended to leave the number of seconds (0-9) the OSD is delayed to the default (0).

1. From the Main dialog box ("Accessing the Main Dialog Box" on page 45), enter the number of seconds (0–9) the OSD is delayed after pressing the **Print Scrn** key. Entering **0** instantly displays the OSD with no delay.
2. Click **OK** to save settings.

   -or-

   Click **X** to exit, or press the **Esc** key to exit without saving settings.

Controlling the Status Flag

The status flag is displayed on the desktop and shows the Name or EID number of the selected server or the status of a particular port. Use the Flag dialog box ("Accessing the Flag Dialog Box" on page 56) to change the flag display by server name or EID number or to change the flag color, opacity, display time, and location on the desktop.

Flag	Description
Darrell	Flag type by name
520255-73F344	Flag type by EID number
Free	Flag indicating that the user has been disconnected from all systems
Free	Flag indicating that the broadcast is activated
Set Position	Control used to set flag position

Downloaded from www.Manualslib.com manuals search engine

Accessing the Flag Dialog Box

From the Main dialog box ("Accessing the Main Dialog Box" on page 45), click **Setup>Flag.** The Flag dialog box is displayed.

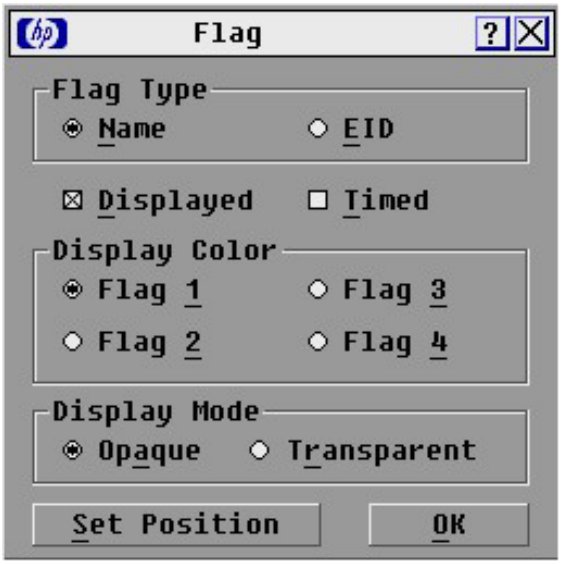

Displaying the Status Flag

1. From the Flag dialog box ("Accessing the Flag Dialog Box" on page 56), select **Name** or **EID** to determine what information is displayed.
2. Select **Displayed** to show the flag constantly, or select **Timed** to display the flag for only five seconds after soft switching.
3. Select a flag color in Display Color.
4. In the Display Mode, select **Opaque** for a solid-color flag or **Transparent** to see the desktop through the flag.
5. Position the status flag on the desktop:
   a. Click **Set Position** to gain access to the Position Flag screen.
   b. Left-click and hold the title bar and drag to the desired location.
   c. Right-click to return to the Flag dialog box.

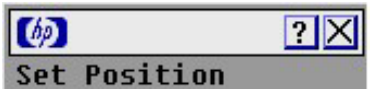

Downloaded from www.Manualslib.com manuals search engine

6. Click **OK** to save settings.

   -or-

   Click **X** to exit, or press the **Esc** key to exit without saving settings.

   NOTE: Changes made to the position flag are not saved until you click **OK** in the Flag dialog box ("Accessing the Flag Dialog Box" on page 56).

Broadcasting to Servers

Analog users can simultaneously control more than one server in a system to be sure that all selected servers receive identical input. For each server receiving the broadcast, you can choose to broadcast keystrokes and mouse movements independently.

NOTE: During broadcast, any users connected to a broadcast server will be disconnected and unable to access any servers.

NOTE: You can broadcast to only one server per Expansion Module ("Installing the Expansion Module" on page 21) connection.

Broadcasting Keystrokes

The keyboard statistics must be identical for all servers receiving a broadcast to interpret keystrokes identically. Specifically, the Caps Lock and Num Lock modes must be the same on all keyboards. While the HP IP Console Switch attempts to send keystrokes to the selected servers simultaneously, some servers can inhibit and thereby delay the transmission.

Broadcasting Mouse Movements

For the mouse to work accurately, all systems must have identical mouse drivers, desktops (such as identically placed icons), and video resolutions. In addition, the mouse must be in exactly the same place on all screens. Because these conditions are extremely difficult to achieve, broadcasting mouse movements to multiple systems can have unpredictable results.

Accessing the Broadcast Dialog Box

From the Main dialog box ("Accessing the Main Dialog Box" on page 45), click **Setup>Broadcast.** The Broadcast dialog box is displayed.

Downloaded from www.Manualslib.com manuals search engine

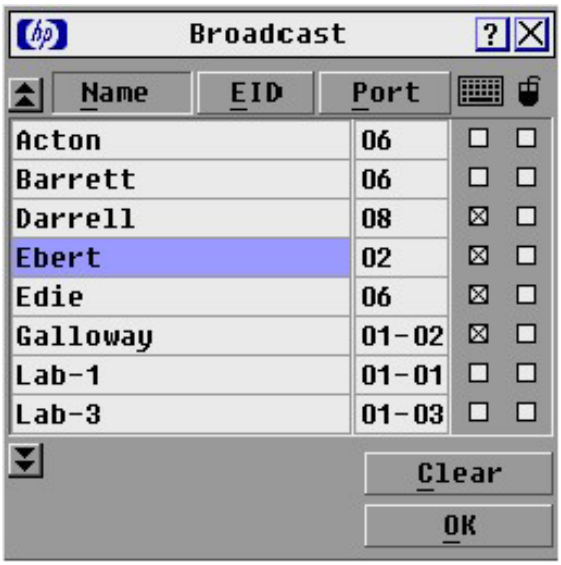

Broadcasting Selected Servers

1. From the Broadcast dialog box ("Accessing the Broadcast Dialog Box" on page 57), select the keyboard and mouse checkboxes for the servers that are to receive the broadcast commands.

   -or-

   Press the **Up** or **Down Arrow** keys to move the cursor to the target server. Then press the **Alt + K** keys to select the keyboard checkbox and/or the **Alt + M** keys to select the mouse checkbox. Repeat for additional servers.

2. Click **OK** to save the settings and return to the Setup dialog box.
3. Click **X** or press the **Esc** key to return to the Main dialog box.
4. From the Main dialog box, click the Commands dialog box ("Accessing the Commands Dialog Box" on page 75), select **Broadcast Enable** to activate broadcasting.
5. From the user station, enter the information and/or perform the mouse movements you want to broadcast.

Downloaded from www.Manualslib.com manuals search engine

Activating the Broadcast Dialog Box

To activate or deactivate broadcasting, from the **Commands** dialog box ("Accessing the Commands Dialog Box" on page 75), select or deselect **Broadcast Enable.**

Setting Up a Scan Pattern

In Scan mode ("Activating Scan Mode" on page 61), the HP IP Console Switch automatically scans port to port (server to server).You can select up to 16 servers from a list of all servers attached to the HP IP Console Switch. You can display the list by either server name or EID number by clicking the appropriate button. Selecting the checkbox beside each server to be added to the scan list creates the scan list. The creation of a scan list does not start Scan mode. You must enable Scan mode through the Scan Enable checkbox on the Commands dialog box ("Accessing the Commands Dialog Box" on page 75).

Accessing the Scan Dialog Box

From the Main dialog box ("Accessing the Main Dialog Box" on page 45), click **Setup>Scan.** The Scan dialog box is displayed.

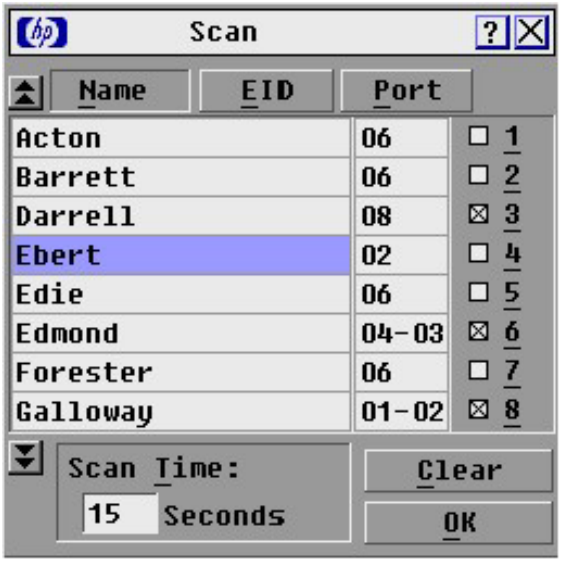

Downloaded from www.Manualslib.com manuals search engine

Adding Servers to the Scan List

1. From the Scan dialog box ("Activating Scan Mode" on page 61), select the checkbox beside each server to be added to the scan list.

   -or-

   Double-click a server name or port.

   -or-

   Press the **Alt** key plus the number of the server you want to scan. You can select up to 16 servers.

2. In the Scan Time box, enter the number of seconds (from 3 to 99) before the scan moves to the next server in the sequence.

3. Click **OK** to save settings.

   -or-

   Click **Clear** to remove all servers from the scan list.

   IMPORTANT: Selecting the checkbox beside each server to be added to the scan list creates the scan list. The creation of a scan list does not start the Scan mode. You must enable Scan mode through the Scan Enable checkbox on the Commands dialog box.

   NOTE: Servers will be scanned in the order they are selected. If you remove a server from the Device Modify dialog box later, the change can affect a custom scan pattern.

Removing Servers from the Scan List

1. From the Scan dialog box ("Activating Scan Mode" on page 61), click the server to be removed.

   -or-

   Double-click a server name or port.

   -or-

   Click **Clear** to remove all servers from the scan list.

2. Click **OK** to save settings.

Downloaded from www.Manualslib.com manuals search engine

Activating Scan Mode

1. From the Commands dialog box ("Accessing the Commands Dialog Box" on page 75), select **Scan Enable.**
2. Click **X** to close the Commands dialog box.

NOTE: The scanning begins as soon as you click **Scan.**

Deactivating Scan Mode

If the OSD is open, select a server.

-or-

If the OSD is not open, move the mouse or press any key on the keyboard. Scanning stops at the currently selected server.

-or-

From the Commands dialog box ("Accessing the Commands Dialog Box" on page 75), deselect **Scan Enable.** Any active connections on the local port are disconnected.

Setting Local Console Switch Security

The OSD enables you to set security on the local port consoles. You can establish a Screen Saver mode that engages after the HP IP Console Switch remains unused for a user-definable time delay. When engaged, the HP IP Console Switch remains locked until any key is pressed or the mouse is moved. Then you can enter the password to log in.

Use the Security dialog box ("Accessing the Security Dialog Box" on page 62) to lock your HP IP Console Switch with password protection, set or change the password, and enable the screen saver.

NOTE: If a password has been previously set, you must enter the password before you can access the Security dialog box.

Downloaded from www.Manualslib.com manuals search engine

Accessing the Security Dialog Box

From the Main dialog box ("Accessing the Main Dialog Box" on page 45), click **Setup>Security.** The Security dialog box is displayed.

Changing the Password

1. From the Security dialog box ("Accessing the Security Dialog Box" on page 62), click the **New** field and press the **Enter** key if the OSD is not open, or double-click the **New** field.
2. Enter the new password in the New field, and then press the **Enter** key.
3. In the Repeat field, reenter the password and press the **Enter** key.
4. Click **OK** to change the password.

   IMPORTANT: A valid password must be alphanumeric and be 5 to 15 characters in length. Permitted characters are case-sensitive and can consist of A–Z, 0–9, spaces, and hyphens.

Setting Password Protection

1. From the Security dialog box ("Accessing the Security Dialog Box" on page 62), set your password as described in the previous procedure ("Changing the Password" on page 62).
2. Select **Enable Screen Saver.**

Downloaded from www.Manualslib.com manuals search engine

3. Enter the number of minutes for Time Delay (from 1 to 99) to delay activation of password protection and the screen saver feature.
4. For Mode, select **Energy** if your monitor is Energy Star® compliant. Otherwise, select **Screen.**
5. (Optional) Click **Test** to activate the screen saver test, which lasts 10 seconds and returns you to the Security dialog box.
6. Click **OK** to save settings.

CAUTION: Monitor damage can result from the use of energy mode with monitors not compliant with Energy Star®.

Logging On to the HP IP Console Switch

1. Press any key on the keyboard, or move the mouse. The Password dialog box appears.
2. Enter the password, and then click **OK.**
3. Press the **Print Scrn** key.

Removing the Password Protection

1. From the Main dialog box ("Accessing the Main Dialog Box" on page 45), click **Setup>Security.** The Password dialog box is displayed.
2. Enter the password, and then click **OK.**
3. In the Security dialog box, click the **New** field and press the **Enter** key.

   -or-

   Double-click the **New** field, leave the New field blank, and press the **Enter** key.
4. Click the **Repeat** field and press the **Enter** key.

   -or-

   Double-click the **Repeat** field, leave the Repeat field blank, and press the **Enter** key.
5. Click **OK** if you want to eliminate the password.

Downloaded from www.Manualslib.com manuals search engine

Exiting Screen Saver Mode

To exit the Screen Saver mode, press any key or move the mouse. The Main dialog box ("Accessing the Main Dialog Box" on page 45) is displayed.

Deactivating the Screen Saver

1. From the Security dialog box ("Accessing the Security Dialog Box" on page 62), deselect **Enable Screen Saver.**
2. Click **OK** to save settings.

To immediately activate the screen saver, press the **Print Scrn** key, and then press the **Pause** key. This command only works when the user is connected to a server.

Activating Screen Saver Mode without Password Protection

1. If your HP IP Console Switch does not require a password to gain access to the Security dialog box ("Accessing the Security Dialog Box" on page 62), proceed to step 2.

   -or-

   If your HP IP Console Switch is password protected, refer to Deactivating the Screen Saver (on page 64), then go to step 2.
2. Select **Enable Screen Saver.**
3. Enter the number of minutes for Inactivity Time (1 to 99) to delay activation of the screen saver.
4. Select **Energy** if your monitor is Energy Star® compliant. Otherwise, select **Screen.**
5. (Optional) Click **Test** to activate the screen saver test, which lasts 10 seconds, then returns you to the Security dialog box.
6. Click **OK** to save settings.

CAUTION: Monitor damage can result from the use of energy mode with monitors not compliant with Energy Star®.

NOTE: No server is selected after the activation of the screen saver mode disconnects the user from a server. The status flag displays Free.

Downloaded from www.Manualslib.com manuals search engine

Preemption Mode

Preemption provides a means for users with sufficient access level to take control of a server from another (remote or local) user with lesser or equal access level. Depending on the access level of the user issuing the preemption request and that of the user being preempted, the preemption request can be rejected.

User Level	Preempted By	Can the Preemption be Rejected?
Local User	Console Switch Admin	Yes
Console Switch Admin	Local User	Yes
Console Switch Admin	Console Switch Admin	Yes
Remote User	Local User	No
Remote User	Console Switch Admin	No

NOTE: The Override Admin account is treated as a Console Switch Admin in the above preemption scenarios.

Downloaded from www.Manualslib.com manuals search engine

Accessing Preempt Dialog Box

From the Main dialog box ("Accessing the Main Dialog Box" on page 45), click **Setup>Preempt.** The Preempt dialog box appears.

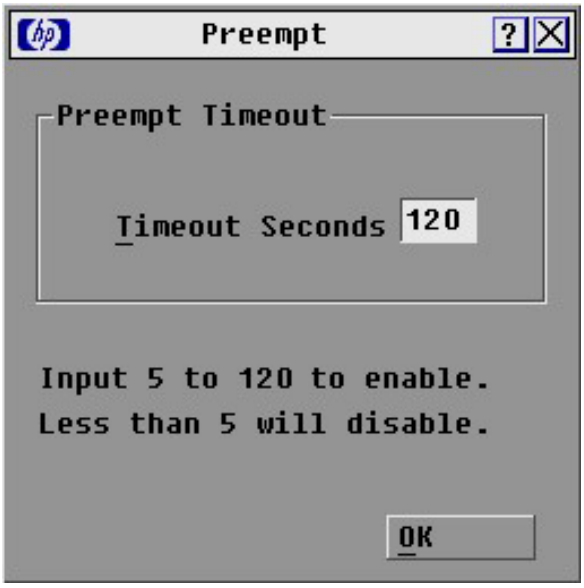

Assigning a Preempt Timeout

In the Preempt dialog box ("Accessing Preempt Dialog Box" on page 66), enter a value in the Timeout Seconds field and click **OK.**

Downloaded from www.Manualslib.com manuals search engine

When you attempt to preempt another user or Admin, a message appears on your screen, and a Preempt Warning appears on the screen of the user or Admin.

These dialogs appear for the time assigned in the Timeout Seconds field set through either the local OSD or the HP IP Console Viewer. If the person you are preempting does not respond within the time assigned, they are disconnected and the preempt is granted.

Downloaded from www.Manualslib.com manuals search engine

Changing the USB Keyboard Language

You can select the language for all USB Interface Adapters connected to the console switch.

Accessing the Keyboard Dialog Box

From the Main dialog box ("Accessing the Main Dialog Box" on page 45), click **Setup>Keyboard.** The Keyboard dialog box appears.

Downloaded from www.Manualslib.com manuals search engine

Selecting the Keyboard Language

1. From the Keyboard dialog box ("Accessing the Keyboard Dialog Box" on page 68), select the keyboard country code. A Keyboard Warning appears.

2. Click **OK.**

Assigning Device Types

While the console switches automatically discovers cascaded Compaq Server Console Switches attached to your unit, you must specify the number of ports on the cascade Compaq Server Console Switch through the Devices dialog box.

Accessing the Devices Dialog Box

From the Main dialog box ("Accessing the Main Dialog Box" on page 45), click **Setup>Devices.** The Devices dialog box appears.

NOTE: The Modify button is only available if a configurable Compaq Server Console Switch is selected.

Downloaded from www.Manualslib.com manuals search engine

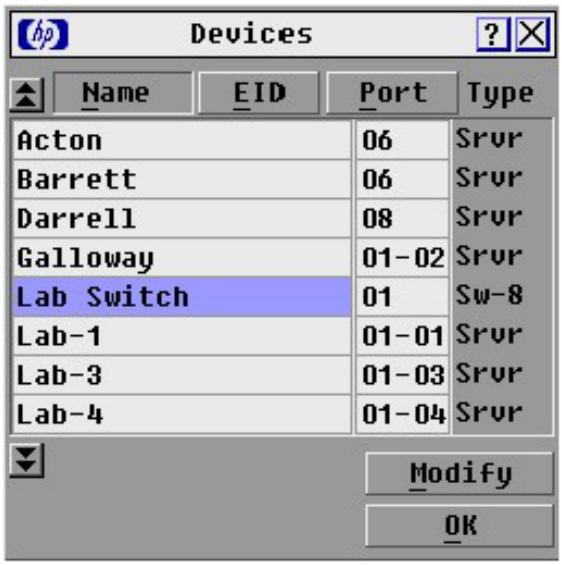

When the HP IP Console Switch discovers a cascaded HP KVM Server Console Switch the port numbering changes automatically to accommodate each server under that console switch. For example, if the console switch is connected to port 02, the switch port is listed as 02, and each server under it is numbered sequentially 02-01, 02-02, and so on.

However, when a HP IP Console Switch discovers a cascaded Compaq Server Console Switch, you must select the number of ports on the Compaq Server Console Switch through the Device Modify dialog box.

Modifying Device Types

1. From the Devices dialog box, select the Port number.

Downloaded from www.Manualslib.com manuals search engine

2. Click **Modify.** The Device Modify dialog box is displayed.

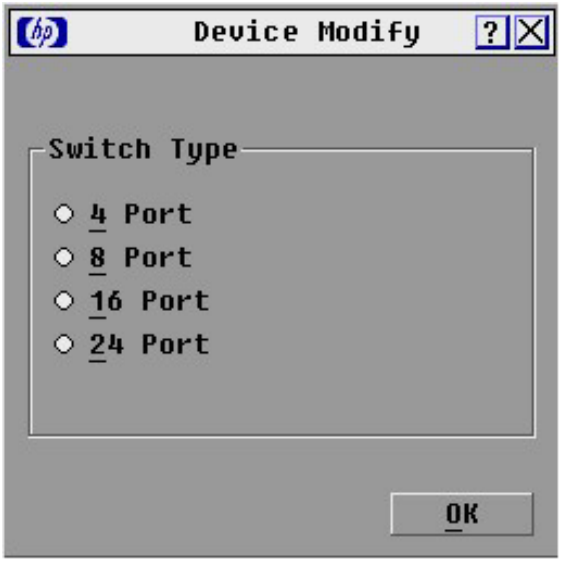

3. Select the number of ports supported by the cascaded Compaq Server Console Switch.
4. Click **OK.**
5. Repeat steps 2 through 4 for each port the user wants to assign a device type.
6. Click **OK** in the Devices dialog box to save settings.

   -or-

   Click **X** to exit, or press the **Esc** key to exit without saving settings.

   NOTE: Changes made in the Device Modify dialog box are not saved until you click **OK** in the Devices dialog box.

Downloaded from www.Manualslib.com manuals search engine

Assigning Names to Servers

1. From the Names dialog box ("Accessing the Names Dialog Box" on page 73), select the name or port number and click **Modify.** The Name Modify dialog box is displayed.

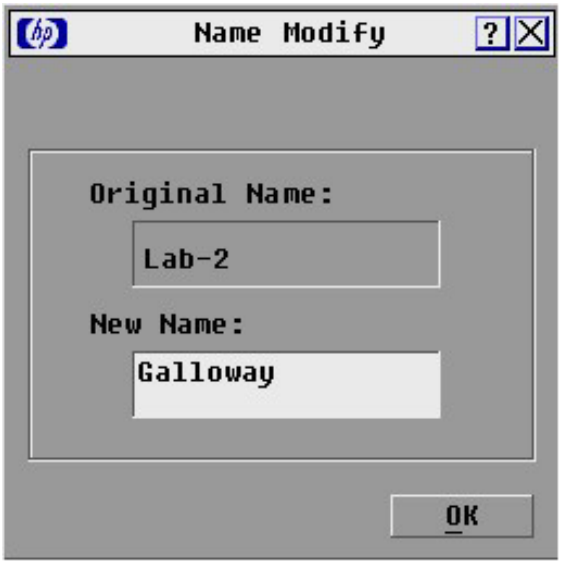

2. Enter a name in the New Name field. Names can be 1 to 15 characters in length. Permitted characters are case-sensitive and can consist of A–Z, 0–9, spaces, and hyphens.
3. Click **OK** to transfer the new name to the Names dialog box.
4. Repeat steps 3 through 5 for each server in the system.
5. Click **OK** to save settings.

   -or-

   Click **X** to exit, or press the **Esc** key to exit without saving settings.

   NOTE: Changes made in the Name Modify dialog box are not saved until you click **OK** in the Names dialog box.

Downloaded from www.Manualslib.com manuals search engine

Assigning Server Names

Use the Names dialog box ("Accessing the Names Dialog Box" on page 73) to identify individual servers or serial devices by name rather than by port number. The Names list is always sorted by port order, and the names are stored in the Interface Adapter. If you move the Interface Adapter or server to another switch port, the HP IP Console Switch recognizes the names and configurations.

Accessing the Names Dialog Box

From the Main dialog box ("Accessing the Main Dialog Box" on page 45), click **Setup>Names.** The Names dialog box is displayed.

NOTE: If the server list has changed since it was last displayed, the mouse cursor turns into an hourglass as the list automatically updates. No mouse or keyboard input is accepted until the list update is complete.

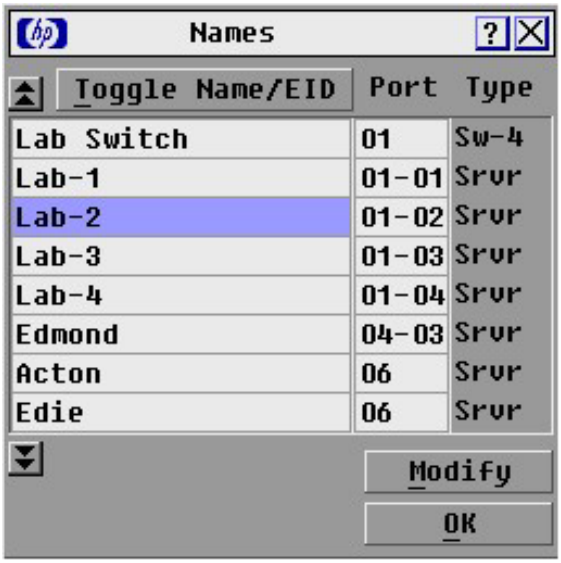

Downloaded from www.Manualslib.com manuals search engine

Managing Server Tasks Using the OSD

You can manage the HP IP Console Switch system from the Commands dialog box ("Accessing the Commands Dialog Box" on page 75) with the OSD, including engaging Scan mode ("Activating Scan Mode" on page 61) and Broadcast mode ("Activating the Broadcast Dialog Box" on page 59), managing user connections, running diagnostics, resetting your device, and upgrading your firmware.

Feature	Purpose
Broadcast Enable	Begins broadcasting to your servers. Configures a server list for broadcasting under the Setup dialog box.
Scan Enable	Begins scanning your servers. Sets up a list for scanning in the Setup dialog box.
User Status	Enables you to view and disconnect users.
IA Status	Upgrades multiple Interface Adapters simultaneously.
Display Versions	Displays version information for the console switch and firmware information for individual Interface Adapters. Enables you to upgrade individual Interface Adapter firmware.
Run Diagnostics	Validates the integrity of your system, including memory, firmware CRC, comm interfaces, switch controller, local and remote video, and Interface Adapters.
Device Reset	Re-establishes operation of the keyboard and mouse.

Downloaded from www.Manualslib.com manuals search engine

Accessing the Commands Dialog Box

From the Main dialog box ("Accessing the Main Dialog Box" on page 45), click **Commands.** The Commands dialog box appears.

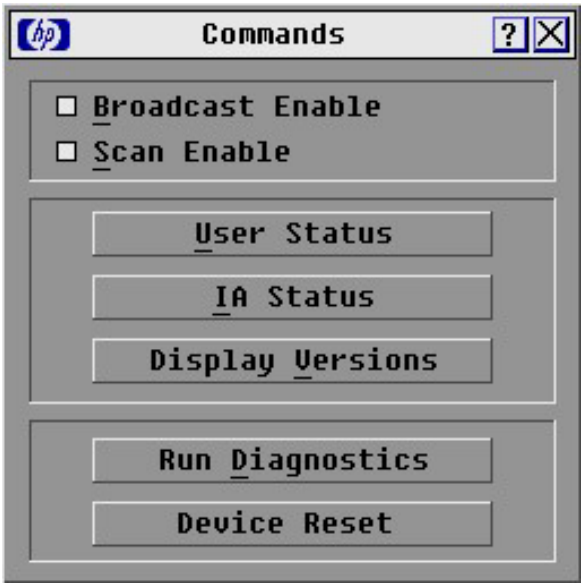

Viewing and Disconnecting User Connections

You can view and disconnect remote network users through the User Status dialog box ("Viewing Current User Connections" on page 76). The user name (U) is always displayed. However, either the server name or Interface Adapter ID number to which the user is connected can also be displayed. The User Status dialog box displays only the number of users the system supports. If no users are currently connected to a channel, the fields are blank and the server indicates it is free.

Downloaded from www.Manualslib.com manuals search engine

Viewing Current User Connections

From the Main dialog box ("Accessing the Main Dialog Box" on page 45), click **Commands>User Status.** The User Status dialog box appears.

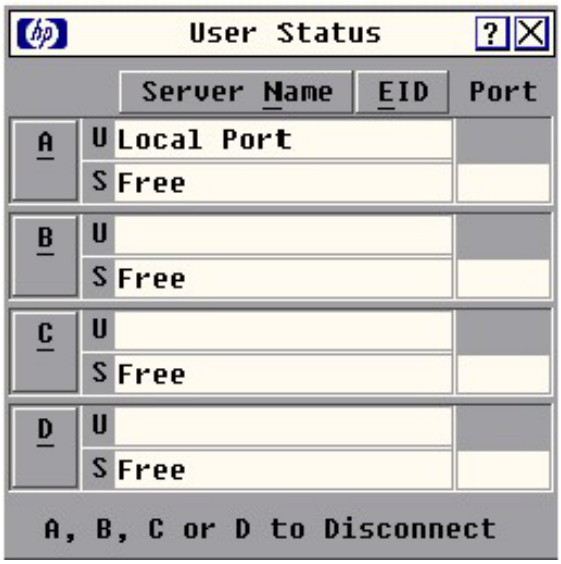

Disconnecting a User

1. From the Main dialog box ("Accessing the Main Dialog Box" on page 45), click **Commands>User Status.** The User Status dialog box appears.

Downloaded from www.Manualslib.com manuals search engine

2. Click the letter of the user to be disconnected. The Disconnect dialog box appears.

3. Click **OK** to disconnect the user and return to the User Status dialog box.

   -or-

   Click **X** to exit, or press the **Esc** key to exit the dialog box without disconnecting a user.

   IMPORTANT: If the User Status dialog box has changed since it last appeared, the mouse cursor becomes an hourglass as the list automatically updates. No mouse or keyboard input is accepted until the list update is complete.

Running System Diagnostics

Clicking Run Diagnostics ("Activating Run Diagnostics" on page 79) runs a command to check the main board functions subsystems (memory, intra-board communications, HP IP Console Switch control, and the video channels) for each system controller.

Test	Description
Memory Test	Reports the condition of the main board RAM. This indicator displays the results of the memory tests performed at system reboot.

Downloaded from www.Manualslib.com manuals search engine

Test	Description
Firmware CRCs	Validates the current firmware images stored in the system FLASH by comparing a CRC value on each image and comparing those results to the expected values.
Comm Interfaces	Verifies the intra-board communication subsystems are accessible and functional by querying the communications controller and performing basic register level tests.
Switch Controller	Verifies the switch matrix controller is accessible and functional by querying the switch matrix controller and performing basic register level tests.
Local and Remote User Video	Verifies that all the video channel subsystems are accessible, functional, and performing basic register level tests.
LAN Connection	Verifies the LAN connection is accessible and functional by verifying the link controller is responsive and monitoring the network traffic. • If the link controller is responsive, the test-passes indictor appears. • If the link controller is non-responsive, the test-failed indictor appears. • If the link controller is functional but no network traffic has been displayed. The LAN icon is green for up to one minute after the network cable has been disconnected.
Online IAs	Indicates the total number of currently connected and powered Interface Adapters.
Offline IAs	Indicates the number of Interface Adapters that have been connected successfully in the past and are powered down.
Suspect IAs	Indicates the number of Interface Adapters that have been detected but are either unavailable for connection or have dropped packets during the ping tests.

Downloaded from www.Manualslib.com manuals search engine

Activating Run Diagnostics

1. From the Main dialog box ("Accessing the Main Dialog Box" on page 45), click **Commands>Run Diagnostics.** A warning message appears, indicating that all users will be disconnected.

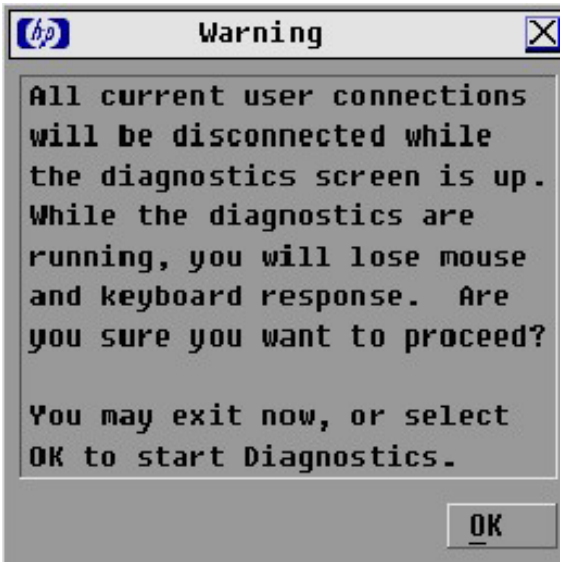

2. Click **OK** to begin. All users are disconnected, and the Diagnostics dialog box appears.

   -or-

Downloaded from www.Manualslib.com manuals search engine

Click **X** or press the **Esc** key to exit the dialog box without running a diagnostic test.

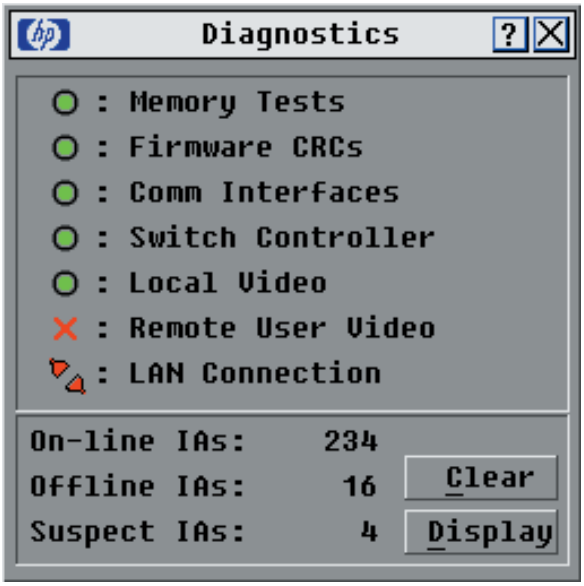

3. As each test is finished, a pass or fail symbol appears.

   A passed test is indicated with a green circle, and a red X indicates a failed test. The LAN connection has a third indicator, which indicates that the LAN connection is functional but no network traffic has been received. The test is complete when the last test symbol displays.

4. (Optional) If you have any offline Interface Adapters, you can click **Clear** to remove them from the list.

Downloaded from www.Manualslib.com manuals search engine

5. (Optional) If you have any suspect Interface Adapters, you can click **Display.** The Suspect Interface Adapter dialog box appears.

Resetting the PS/2 Device

NOTE: The reset PS/2 device function is only for cascaded console switches.

If your PS/2 device locks up, you can re-establish operation of these peripherals by issuing a device reset. The device reset sends a key sequence to the server, which causes the device settings to be sent to the console switch. With communication re-established, functionality is restored to the user.

NOTE: This function is for Windows®-based computers only. Resetting the PS/2 devices on a computer running any other operating system might require that you reboot that computer.

1. From the Main dialog box, click **Commands.** The Commands dialog box appears.

Downloaded from www.Manualslib.com manuals search engine

2. Click **Device Reset.** A warning appears.

Displaying Version Information

The Display Versions dialog box ("Accessing the Version Dialog Box" on page 82) enables you to view the HP IP Console Switch versions, as well as keyboard and mouse information for the currently selected server.

Accessing the Version Dialog Box

NOTE: The application version is the firmware version.

NOTE: Provide the application version number when communicating with HP customer service centers.

Downloaded from www.Manualslib.com manuals search engine

1. From the Main dialog box ("Accessing the Main Dialog Box" on page 45), click **Commands>Display Versions.** The Version dialog box appears. The top half of the box lists the subsystem versions in the HP IP Console Switch.

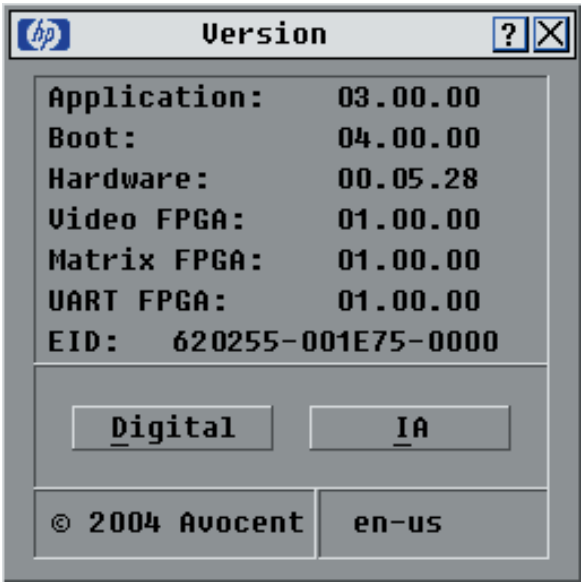

2. Click **Digital** to view the IP Console Viewer versions. The Digital Version dialog box appears. The top section identifies the digitizer subsystem versions. The center section identifies the current network settings.

Downloaded from www.Manualslib.com manuals search engine

3. Click **IA** to access the IA Selection dialog box to view individual Interface Adapter cable version information. The IA Selection dialog box appears.

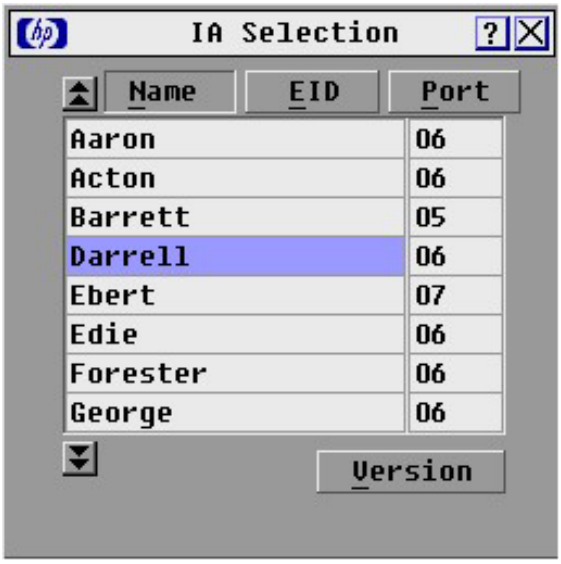

Downloaded from www.Manualslib.com manuals search engine

4. To view the selected Interface Adapter cable, click **Version.** The IA Version dialog box appears.

Downloaded from www.Manualslib.com manuals search engine

5. Click **X** to exit.

Resetting the PS/2 Interface Adapter

> **NOTE:** The reset PS/2 device function is only for cascaded console switches.

Occasionally, when cascading to a legacy console switch, a PS/2 Interface Adapter can drop out of the cascade configuration. In the IA Version dialog box of a PS/2 Interface Adapter, you can reset that Interface Adapter. By performing a Reset IA, the Interface Adapter re-initializes back into the cascade configuration and continues to function properly.

> **NOTE:** This function is for Windows®-based computers only. Resetting the PS/2 devices on a computer running any other operating system might require that you reboot that computer.

1. From the Main dialog box ("Accessing the Main Dialog Box" on page 45), click **Commands>Display Versions.** The Version dialog box appears.
2. Click **IA.** The IA Version dialog box appears.

Downloaded from www.Manualslib.com manuals search engine

3. In the IA Version dialog box for the PS/2 interface Adapter, click **Reset.** A Reset IA warning appears and the PS/2 Interface Adapter is reset.

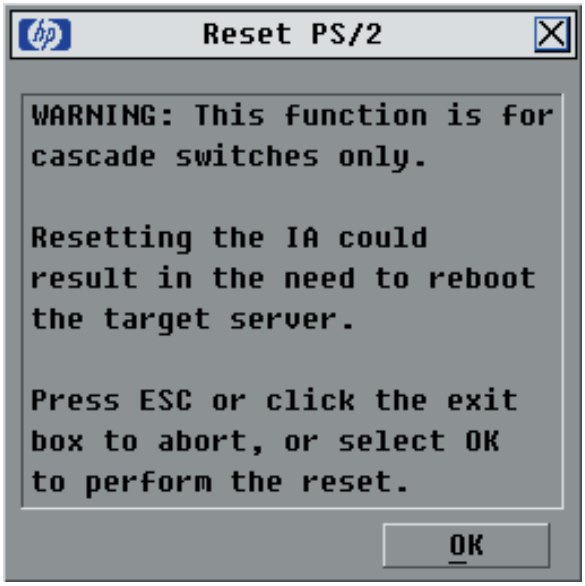

Upgrading the Interface Adapter Firmware

The Interface Adapter firmware can be loaded individually ("Loading the Interface Adapter Firmware Individually" on page 87), or upgraded simultaneously ("Upgrading the Interface Adapter Firmware Simultaneously" on page 88). The servers attached to the Interface Adapters must be powered on while upgrading the firmware.

Loading the Interface Adapter Firmware Individually

NOTE: This method of loading the Interface Adapter firmware will always overwrite the current version of firmware in the Interface Adapter. HP recommends upgrading your Interface Adapters simultaneously ("Upgrading the Interface Adapter Firmware Simultaneously" on page 88), which only upgrades Interface Adapters needing a new version of firmware.

1. From the Main dialog box ("Accessing the Main Dialog Box" on page 45), click **Commands>Version.** The Version dialog box is displayed.

Downloaded from www.Manualslib.com manuals search engine

2. Click **IA.** The IA Selection dialog box is displayed.

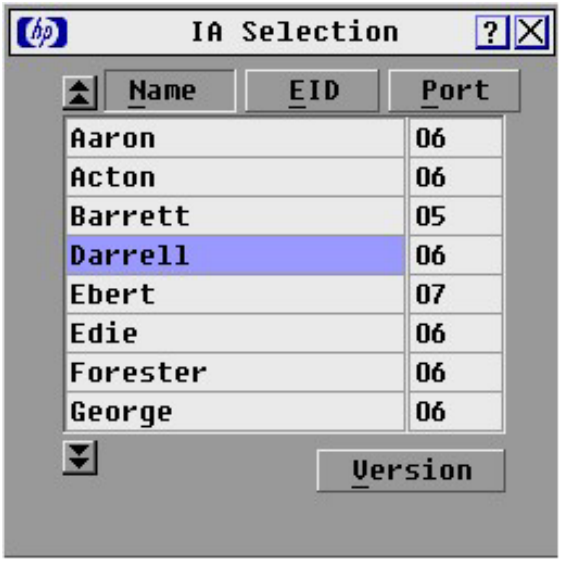

3. Select the individual Interface Adapter, and click **Version.** The IA Version dialog box is displayed.
4. Click **Load Firmware.**

Upgrading the Interface Adapter Firmware Simultaneously

1. From the Main dialog box ("Accessing the Main Dialog Box" on page 45), click **Commands>IA Status.** The IA Status dialog box is displayed.

Downloaded from www.Manualslib.com manuals search engine

2. Select **PS/2**, **USB,** or **Serial** then click **Upgrade.** The IA Upgrade dialog box is displayed.

3. Click **OK** to save settings.
4. Press the **Esc** key to return to the Main dialog box ("Accessing the Main Dialog Box" on page 45). The OSD indicators are displayed as yellow while the upgrade is in progress. The indicators change to red and then to green when the upgrade is complete.

   NOTE: Wait until the OSD indicators are displayed as green before continuing.

Downloaded from www.Manualslib.com manuals search engine

Downloaded from www.Manualslib.com manuals search engine

Network Settings

In This Section

Setting Up A Network

The HP IP Console Switch system uses IP address to uniquely identify the console switches and computers running the HP IP Console Viewer. The HP IP Console Switch supports both BootP (a subset of DHCP) and static IP addressing. HP recommends that IP address be reserved for each unit and that they remain static while the console switches are connected to the network.

Establishing LAN Connections

NOTE: Although 10Base-T Ethernet can be used, HP recommends a dedicated, switched 100Base-T network for improved performance.

Connect the network cable from the LAN port on the rear panel of the HP IP Console Switch to the network, then power on all attached systems. For more information, refer to the HP IP Console Switch Software Guide included on the CD provided with this kit.

Configuring the HP IP Console Switch Hardware

To configure the HP IP Console Switch:

1. Connect one end of a serial cable to an available COM port on the server or workstation.
2. Connect the other end of the serial cable to the serial port ("Components" on page 7) on the HP IP Console Switch.

Downloaded from www.Manualslib.com manuals search engine

3. Configure the terminal emulation software for the server, such as Hyperterminal or Minicom ("Configuring Minicom" on page 93).
4. Plug the supplied power cord into the power cord connector ("Components" on page 7) on the HP IP Console Switch and then into a valid power source, if not already connected.
5. Power on the HP IP Console Switch, if not already powered on. The activity indicator light ("Components" on page 7) powers on. The activity indicator blinks for 30 seconds while performing a self-test. Approximately 10 seconds after it stops blinking, press the **Enter** key to access the Main menu.
6. Select **Option 1—Network Configuration.** The Network Configuration menu appears.
7. Select **Option 1** to set the Network Speed. When possible, set the connection manually without relying on the auto negotiate feature. After you enter a selection, return to the Network Configuration menu.
8. Select **Option 2** to specify a Static/BootP IP address. Use a static IP address for ease of configuration. If you are using a BootP address, configure the BootP server to provide an IP address to the console switch, omit step 9, and continue to the next procedure.

Downloaded from www.Manualslib.com manuals search engine

9. Select **Option 3 through 6** from the Terminal Applications menu to finish configuring the console switch for an IP Address, Netmask, Default Gateway, and DNS. When this configuration is complete, enter `0` to return to the IPViewer HyperTerminal menu.

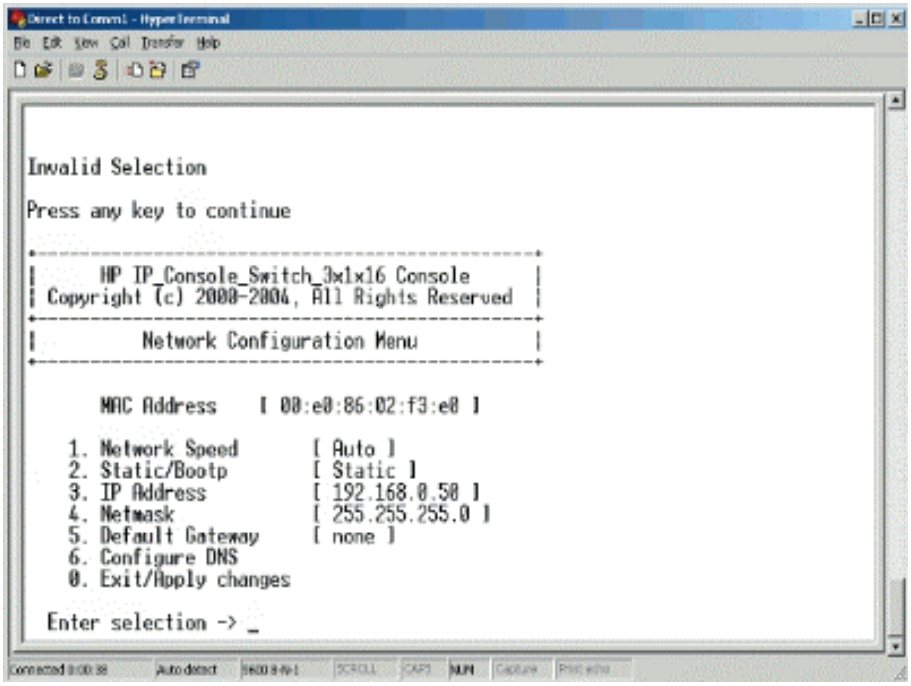

Configuring Minicom

NOTE: The example below is uses Red Hat 3.0. For more information, refer to your Linux operating systems HELP, or documentation.

IMPORTANT: Minicom is a utility that is loaded during the installation of Linux. However, if you do not select the option to install the Linux Utilities during the operating system installation, you cannot use Minicom without downloading the Minicom X.X.i386.rpm file from the Red Hat website. (Refer to the procedure for installing RPMs on the Red Hat website.)

To configure Minicom:

1. Log on to a Linux console, or open a terminal and enter `minicom-s` at the command prompt. The Configuration menu appears.
2. Select **Serial Port Setup.** The Change which setting? menu appears.

Downloaded from www.Manualslib.com manuals search engine

3. Select **Option A (Serial Device).** Manually change the device type from "dev/modem" to "/dev/ttyS0" and press the **Enter** key.
4. Select **Option E (Bps/Par/Bits).** The Comm Parameters menu appears.
5. Select **E (Speed 9600 Bps),** and press the **Enter** key. The designation 9600 8N1 appears next to Option E.
6. Select **Option F (Hardware Flow Control).**

   Be sure that the Change which setting? menu is configured as follows:

   A—Serial Device: /dev/ttyS0

   B—Lockfile Location: /var/lock

   C—Callin Program:

   D—Callout Program:

   E—Bps/Par/Bits: 9600 8N1

   F—Hardware Flow Control: No

   G—Software Flow Control: No
7. Press the **Enter** key to return to the Configuration menu. Scroll down to the Save setup as dfl option, and press the **Enter** key.
8. Scroll down the Configuration menu to the Exit from the Minicom option, and press the **Enter** key.
9. From the command prompt, enter `Minicom.` As soon as a connection is established, the Main menu for the HP IP Console Switch appears. Follow the on-screen options to configure the HP IP Console Switch. The IPViewer HyperTerminal menu with six options appears.

Mouse Drivers

Use the default PS/2 mouse drivers for all servers attached to the console switch.

NOTE: To ensure optimum mouse performance, refer to the *HP IP Console Switch Software Guide,* on the CD that was shipped with this kit, or go to the HP website (http://h18004.www1.hp.com/products/servers/proliantstorage/rack-options/kvm/soft-firmware.html) to download the latest documentation.

Downloaded from www.Manualslib.com manuals search engine

Upgrading the Firmware Using TFTP

In This Section

Overview

The HP IP Console Switch upgrade feature enables you to upgrade the HP IP Console Switch with the latest available firmware through either the serial cable connector or HP IP Console Viewer.

To update the HP IP Console Switch, you need a TFTP service application on workstation or server that will be used to perform upgrades. After the TFTP has been enabled, then upgrade the HP IP Console Switch firmware.

NOTE: The HP IP Console Switch 1x1x16 and HP IP Console Switch 3x1x16 with firmware 3.0.0 or higher are not downgradeable to versions lower than 3.0.0. Any attempt to downgrade to versions lower than 3.0.0 will be rejected by the HP IP Console Switch.

Enabling TFTP for Windows Operating Systems

To enable TFTP for Windows operating systems, follow the instructions in the \TFTP\TFTP Install Instructions.txt file on the CD included with this kit or the Softpaq TFTP directory.

Enabling TFTP for Linux Operating Systems

For most systems using RPM packages, TFTP is provided by the TFTP server RPM (RPM-IVH/Redhat/RPMS/). Depending on the type of distribution, the Internet services daemon is provided by xinetd.

NOTE: The example below is uses Red Hat 3.0. For more information, refer to your Linux operating systems HELP, or documentation.

Downloaded from www.Manualslib.com manuals search engine

NOTE: By default, TFTP executes in secure mode and only provides readable files under the /tftpboot directory. Other directories can be specified through the /etc/xinetd.d/tftp files. In secure mode, TFTP expects the file to be relative to the/tftpboot directory.

To enable TFTP for Linux operating systems (GNOME):

1. In the GNOME viewer go to the main menu and select **Programs>System>Service Configuration.**
2. In the Service Configuration menu, verify that the xinetd checkbox is selected to start at boot.

   -or-

   If the checkbox is not selected, select the box and click **Save.**
3. Find TFTP in the list of services and highlight it.
4. Select the checkbox to start TFTP at boot, then click **Save.**

To enable TFTP for Linux operating systems (KDE):

1. Go to the main menu and select **Control Panel>Services.**
2. In the Service Configuration menu, verify that the xinetd checkbox is selected to start at boot.

   -or-

   If the checkbox is not selected, select the box and click **Save.**
3. Find TFTP in the list of services and highlight it.
4. Select the checkbox to start TFTP at boot, then click **Save**.

Verifying TFTP for Linux Operating Systems

NOTE: The example below is uses Red Hat 3.0. For more information, refer to your Linux operating systems HELP, or documentation.

1. Verify that `in.tftpd` service is running with the following `ps -ef | grep tftpd.`

   By default the `/etc/xinetd.d/tftp` configuration file uses `/tftpboot` as the directory.
2. Create a `/tftpboot` directory, if it doesn't exist, and set the permissions for public access.

Downloaded from www.Manualslib.com manuals search engine

3. Copy the firmware file to `/tftpboot`.
4. Cd to `/tmp`.
5. From the shell prompt, enter `tftp localhost` (or name of local system).
6. Download the file by entering the following command: `get/tftpboot/filename`
7. Enter `quit`.
8. From the shell prompt, check to see if the file is in the `/tmp` directory.

If the TFTP was configured correctly, the preceding steps should transfer the file to the current directory.

Upgrading the HP IP Console Switch Firmware

Before beginning the upgrade procedure, be sure that the Secure TFTP Server is installed and that the GET access permissions for the folder the updated file is in is selected. Also, be sure that the HP IP Console Switch is on the same network as the computer that is being used for the upgrade.

Upgrading the HP IP Console Switch Firmware

To upgrade the firmware for Windows operating systems, follow the instructions in the \TFTP\TFTP Install Instructions.txt file on the CD included with this kit or the Softpaq TFTP directory.

-or-

To upgrade the firmware for Linux operating sytems:

1. Connect one end of a serial cable to an available COM port on the server or workstation.
2. Connect the other end of the serial cable to the serial port ("Components" on page 7) on the HP IP Console Switch.
3. Configure the terminal emulation software for the server, such as Minicom ("Configuring Minicom" on page 93).

Downloaded from www.Manualslib.com manuals search engine

4. Plug the supplied power cord into the power cord connector ("Components" on page 7) on the HP IP Console Switch and then into a valid power source, if not already connected.
5. Power on the HP IP Console Switch, if not already powered on. The activity indicator light ("Components" on page 7) powers on. The activity indicator blinks for 30 seconds while performing a self-test. Approximately 10 seconds after it stops blinking, press the **Enter** key to access the Main menu.
6. Select **Option 2—Firmware Management.** The Firmware Management menu appears.

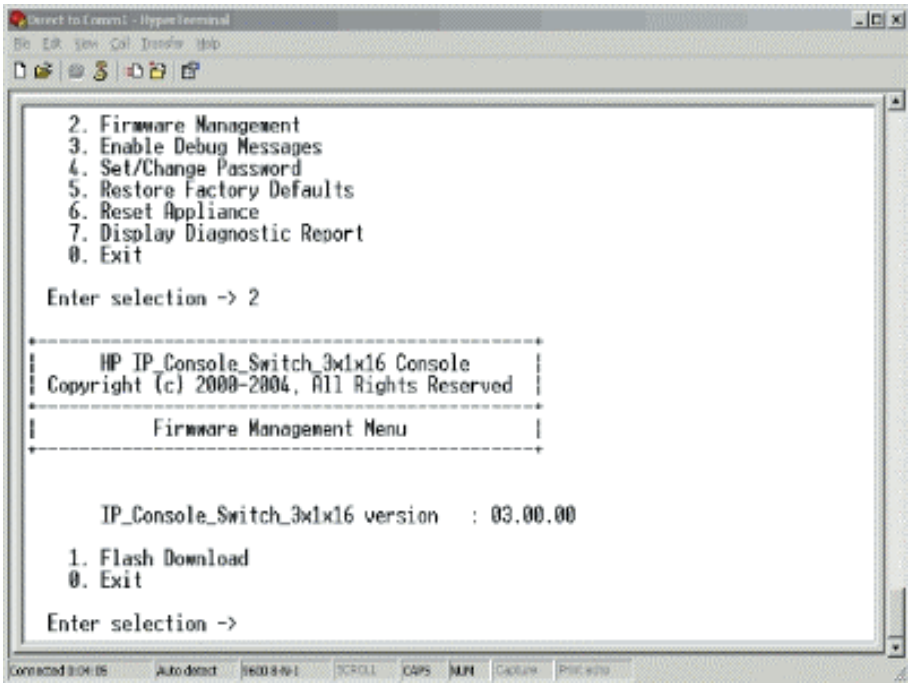

7. Select **Option 1—Flash Download.**
8. Enter the IP address of the TFTP server that has the updated file and the exact path of the updated file (for example, C:\tftp\h3_0_0_english.fl).
9. Enter `Y` at the prompt to download the upgrade file from the given IP address. The HP IP Console Switch begins to upgrade.

Downloaded from www.Manualslib.com manuals search engine

CAUTION: Do not cycle power to the HP IP Console Switch during this process. A loss of power might render the HP IP Console Switch inoperable and require that the unit be returned to the factory for repair. Be patient; the update can take as long as 10 minutes.

When the upgrade process is complete, the HP IP Console Switch reboots. The IP Console Switch is ready message appears.

Upgrading the HP IP Console Switch Firmware through the IP Console Viewer

To upgrade the firmware for through the HP IP Console Viewer, follow the instructions in the \TFTP\TFTP Install Instructions.txt file on the CD included with this kit or the Softpaq TFTP directory.

Downloaded from www.Manualslib.com manuals search engine

Downloaded from www.Manualslib.com manuals search engine

Troubleshooting

In This Section

When a Serial Interface Adapter Stops Responding

When using the HP IP Console Viewer to connect to a Serial Interface Adapter, perform an Automatic Video Adjust **(Tools>Automatic Video Adjust).** If the Serial Interface Adapter becomes unresponsive, verify flow control setting matches the target device, then power cycle the Serial interface Adapter. If flow control cannot be set on the target device, use a slower BAUD rate.

Downloaded from www.Manualslib.com manuals search engine

When the Activity Light Indicator is Not On

1. Be sure that the HP IP Console Switch is powered on and that the power source is valid.
2. Be sure that the cable connections are correct.

When the Cable Connections Are Not Correct

1. Check all cable connections between the console switch, UTP CAT5 cables, Interface Adapters ("Installing a PS/2 or USB Interface Adapter" on page 25, "Installing a Serial Interface Adapter" on page 27), Expansion Modules, and servers.
2. Be sure that the Interface Adapter connectors are connected to the correct ports on the attached servers.
3. Be sure that the correct Interface Adapters are being used. Only HP Interface Adapters can be used with this product.
4. Be sure that a UTP CAT5 cable is connected from the RJ-45 port on the Interface Adapter to the appropriate server port ("Components" on page 7) on the rear panel of the console switch.
5. Be sure that the UTP CAT5 cables being used are the correct cable length ("Connection Length Table" on page 107).
6. Be sure that the standard UTP CAT5 cables supplied by HP are being used. The cables being used must be unshielded twisted pair, utilizing all four pairs of wires.
7. Be sure that if an Expansion Module is being used, the console switch is connected to the IN port on the Expansion Module. The OUT ports on the Expansion Module should be connected to the attached servers by Interface Adapters.

When the Cascaded Console Switch Configurations Are Not Correct

1. Be sure that the HP IP Console Switch configurations are correct.

Downloaded from www.Manualslib.com manuals search engine

2. Be sure that the cascade configurations ("Cascading Console Switches" on page 37) are correct.
3. Be sure that the cascaded console switches are powered on.

   IMPORTANT: While upgrading the firmware, do not power off the HP IP Console Switch or attempt any operations.

4. Be sure that the cascaded console switches and all attached Interface Adapters ("Upgrading the Interface Adapter Firmware Simultaneously" on page 88) have upgraded firmware.

When the Console Switch Does Not Have the Correct Firmware

IMPORTANT: While upgrading the firmware, do not power off the HP IP Console Switch or attempt any operations.

1. Be sure that you have the latest console switch firmware version ("Displaying Version Information" on page 82) and Interface Adapter firmware version ("Displaying Version Information" on page 82).
2. Upgrade the console switch firmware ("Upgrading the HP IP Console Switch Firmware" on page 97), Interface Adapter firmware ("Upgrading the Interface Adapter Firmware Simultaneously" on page 88), and cascaded console switch firmware if you do not have the latest versions installed.

When the Console Switch is Not Working Properly

1. Determine whether the console switch is operational ("Is the Console Switch Operational?" on page 114).
2. Determine if all the cable connections are correct.

When the Console Switch Hangs After Being Rebooted

1. Reboot the HP IP Console Switch again (turn the power off and back on again).
2. Perform the following powering-on sequence.

Downloaded from www.Manualslib.com manuals search engine

a. Power on any cascaded console switches.

b. Power on the HP IP Console Switch. The activity indicator light powers on.

c. Power on the monitor.

d. Power up the server.

When the Console Switch Serial Port Password is Lost

Ultimate responsibility for data security must be enforced by you. If you set and subsequently lose a serial port password, the console switch must be returned for repair at your cost.

When the Expansion Module is Not Being Recognized by a Compaq Server Console Switch

Determine if an Expansion Module is being used in combination with a cascaded Compaq Server Console Switch. An Expansion Module is considered a level of cascading ("Cascading Console Switches" on page 37) and therefore cannot be used in combination with a Compaq Server Console Switch.

When the Local OSD Console Switch Password is Lost

Ultimate responsibility for data security must be enforced by you. If you set and subsequently lose your password, contact HP Service and request escalation to the HP EPR Team (the highest level of escalation).

When the Local User Cannot View the OSD Copyright Notice

1. Be sure that the power source is valid.

Downloaded from www.Manualslib.com manuals search engine

2. Be sure that the cable connections are correct.
3. Be sure that the monitor is valid.

When the Local User Cannot View the OSD Flag

Preview the preferences selected in the OSD to determine if the local port display has been disabled or set to time out. If the preferences are set not to display the OSD flag or to have the flag time out, then the OSD flag does not display.

When the Mouse and Keyboard Lose Functionality After the Reset PS/2 Button is Pressed While Operating a UNIX Based Platform

The Reset PS/2 button is a Microsoft® Windows® based function. Restart the desktop to gain mouse and keyboard functionality.

When the Mouse Does Not Align

Refer to the *HP IP Console Switch Software Guide* included on the CD provided with your console switch.

When the OSD Goes Blank after a Mouse and Keyboard Have Been Reset Message Appears

This happens when viewing a cascaded Compaq legacy console switch and an HP IP Console Switch on separate monitors, and the mouse/keyboard reset button has been pressed. The mouse and keyboard are locked up on the Compaq legacy console switch. After approximately one minute, the Compaq legacy console switch returns to normal functionality.

Downloaded from www.Manualslib.com manuals search engine

When the OSD is Distorted or Not Readable

Be sure that the monitor to which the target server is set supports the refresh rate.

When the OSD is Inaccessible

Press the **Ctrl** key twice.

When RILOE and iLO are not Working Correctly with the HP IP Console Switch

The HP IP Console Switch firmware must be version 3.0.0 or later.

When the Run Diagnostics Test Fails

IMPORTANT: While upgrading the firmware, do not power off the HP IP Console Switch or attempt any operations.

1. Upgrade the console switch firmware ("Upgrading the HP IP Console Switch Firmware" on page 97).
2. Upgrade the Interface Adapter firmware ("Upgrading the Interface Adapter Firmware Simultaneously" on page 88).

When the Screen Saver Does Not Turn On

Be sure to click **OK** to confirm the screen saver selection. Click **X** or press the **Esc** key to cancel the command.

When the Servers Are Still Listed Although They Have Been Disconnected

Perform the Run Diagnostics ("Running System Diagnostics" on page 77) function, from the Diagnostics dialog box, and click **Clear.**

Downloaded from www.Manualslib.com manuals search engine

When the System Does Not Recognize the Cascaded Console Switches

IMPORTANT: While upgrading the firmware, do not power off the HP IP Console Switch or attempt any operations.

Be sure that all of the console switches are upgraded with the latest firmware ("Upgrading the HP IP Console Switch Firmware" on page 97).

When the Video Displays All Green or Red

1. Check the UTP CAT5 cable for breaks or bad crimps.
2. Check the VGA connection for bent pins.
3. Check to be sure you after using a normal straight through cable instead of a network cross-over (NULL modem) cable.

Connection Length Table

The HP IP Console Switch offers optimum video performance when the distance between the server and console switch is 15.24 m (50 ft) or less (1280 x 1024 at 75 Hz). The system is capable of operation at distances up to 30.48 m (100 ft) at reduced video resolutions (800 x 640 at 60 Hz, worst case).

	1280 x 1024	**1024 x 768**	**800 x 640**
15.24 m (50 ft)	X	X	X
22.86 m (75 ft)			X
30.48 m (100 ft)			X

Downloaded from www.Manualslib.com manuals search engine

Downloaded from www.Manualslib.com manuals search engine

Frequently Asked Questions

In This Section

Are the Expansion Module Ports Hot-Pluggable?

Yes.

Are the Interface Adapters Hot-Pluggable?

Yes.

Downloaded from www.Manualslib.com manuals search engine

Are the Keyboard, Monitor, and Mouse Connections on the Console Switch Hot-Pluggable?

Yes.

Are the Server Connections on the Console Switch Hot-Pluggable?

Yes.

Can the Console Switch Be Mounted in a Round-Hole Rack?

Yes, the HP IP Console Switch can be mounted in a round-hole rack using the standard-mount installation.

Can the Console Switch Be Side-Mounted in a Round-Hole Rack?

No.

Do You Have to Power Down a Server to Replace an Interface Adapter?

No.

Has the Customer Verified the Firmware Version?

IMPORTANT: While upgrading the firmware, do not power off the HP IP Console Switch or attempt any operations.

Downloaded from www.Manualslib.com manuals search engine

1. Be sure that you have the latest console switch firmware version ("Displaying Version Information" on page 82) and Interface Adapter firmware version ("Displaying Version Information" on page 82).
2. Upgrade the console switch firmware ("Upgrading the HP IP Console Switch Firmware" on page 97), Interface Adapter firmware ("Upgrading the Interface Adapter Firmware Simultaneously" on page 88), and cascaded console switch firmware if you do not have the latest versions installed.

Does the Customer Have the Correct Configurations?

1. Be sure that the HP IP Console Switch configurations are correct.
2. Be sure that the cascade configurations ("Cascading Console Switches" on page 37) are correct.
3. Be sure that the cascaded console switches are powered on.

   IMPORTANT: While upgrading the firmware, do not power off the HP IP Console Switch or attempt any operations.

4. Be sure that the cascaded console switches and all attached Interface Adapters ("Upgrading the Interface Adapter Firmware Simultaneously" on page 88) have upgraded firmware.

How Do I Access the Main Dialog Box?

Press the **Print Scrn** key. The Main dialog box appears.

Downloaded from www.Manualslib.com manuals search engine

NOTE: You can also press the **Ctrl** key twice within one second to launch the OSD. You can use this key sequence in any place you see Print Scrn.

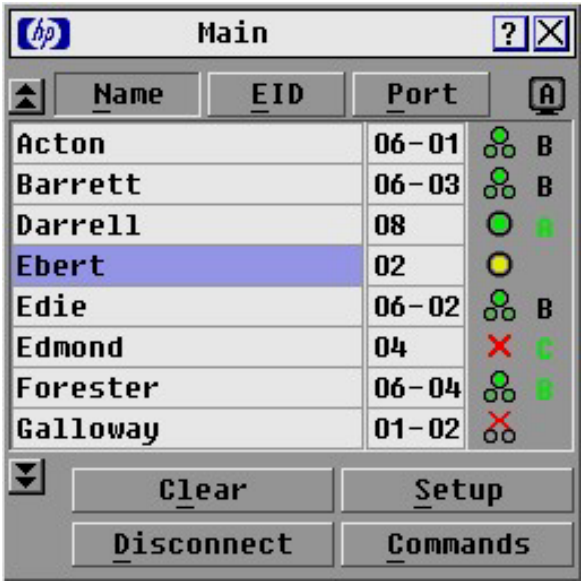

How Do I Cascade Console Switches?

Refer to "Cascading Console Switches (on page 37)."

How Do I Change the Keyboard Language?

Language-specific keyboard emulation in the Interface Adapter ("Installing a PS/2 or USB Interface Adapter" on page 25, "Installing a Serial Interface Adapter" on page 27) is determined by the language chosen on the OSD. For more information, refer to "Changing the USB Keyboard Language (on page 68)."

Downloaded from www.Manualslib.com manuals search engine

How Do I Know Which Port My Cascaded Console Switch is Connected To?

Refer to "Viewing and Selecting Ports and Servers (on page 46, "Viewing the Port Column" on page 46)."

How Do I Locally Connect a Cascaded Console Switch?

1. Power off the cascaded console switch.
2. Power off the main console switch.
3. Disconnect the local KVM cables from the main console switch.
4. Connect the local port KVM cables to the cascaded console switch.
5. Power on the cascaded switch.

How Do I Look at My Console Switch Firmware Version?

Refer to "Displaying the Console Switch Firmware Version ("Displaying Version Information" on page 82)."

How Do I Look at My Interface Adapter Firmware Version?

Refer to "Displaying the Interface Adapter Firmware Version ("Displaying Version Information" on page 82)."

How Do I Turn the Screen Saver Off?

1. From the Security dialog box ("Accessing the Security Dialog Box" on page 62), deselect **Enable Screen Saver.**

Downloaded from www.Manualslib.com manuals search engine

2. Click **OK** to save settings.

To immediately activate the screen saver, press the **Print Scrn** key, and then press the **Pause** key. This command only works when the user is connected to a server.

How Do I Use the Run Diagnostics Feature?

Refer to "Running System Diagnostics (on page 77)."

Is the Console Switch Operational?

1. Ask the customer to connect the KVM cables to the appropriate connectors ("Components" on page 7) on the rear panel of the console switch.
2. Power on the HP IP Console Switch.

   Does the activity indicator light ("Components" on page 7) on the rear panel of the console switch light up?

   If the activity indicator light is on, the console switch is operational.

   -or-

   If the activity indicator light is not on, ask the customer to be sure the power source is valid, the power button is on, and the cables are connected properly.
3. After the activity indicator light is on, which means the console switch is operational, ask the customer to press the **Prnt Scrn** key on the keyboard attached to the monitor that is connected to the console switch (local port). The Main menu appears and if no servers are connected, the screen is blank.

What are the Minimum and Maximum Cable Lengths?

Refer to "Connection Length Table (on page 107)."

What Kind of CAT5 Cables Are Supported?

Only UTP CAT5, CAT6, and CAT7 cables are supported.

Downloaded from www.Manualslib.com manuals search engine

Why Can Remote HP IP Console Switch Users Not Access Servers Attached to a Cascaded HP KVM Server Console Switch?

In order for remote HP IP Console Switch users to access servers attached to a cascaded HP KVM Server Console Switch, the HP KVM Server Console Switch must be in Free Mode or have the screen saver enabled.

To enable Free Mode on the HP KVM Server Console Switch, press the **Print Scrn** key, the **Alt + 0** keys, or click **Disconnect** in the Main dialog box. No server is selected, and the status flag displays Free. (This situation only applies to the **0** on the keyboard, not the keypad.)

Downloaded from www.Manualslib.com manuals search engine

Downloaded from www.Manualslib.com manuals search engine

Regulatory Compliance Notices

In This Section

Regulatory Compliance Identification Numbers

For the purpose of regulatory compliance certifications and identification, this product has been assigned a unique regulatory model number. The regulatory model number can be found on the product nameplate label, along with all required approval markings and information. When requesting compliance information for this product, always refer to this regulatory model number. The regulatory model number is not the marketing name or model number of the product.

Downloaded from www.Manualslib.com manuals search engine

Federal Communications Commission Notice

Part 15 of the Federal Communications Commission (FCC) Rules and Regulations has established Radio Frequency (RF) emission limits to provide an interference-free radio frequency spectrum. Many electronic devices, including computers, generate RF energy incidental to their intended function and are, therefore, covered by these rules. These rules place computers and related peripheral devices into two classes, A and B, depending upon their intended installation. Class A devices are those that may reasonably be expected to be installed in a business or commercial environment. Class B devices are those that may reasonably be expected to be installed in a residential environment (for example, personal computers). The FCC requires devices in both classes to bear a label indicating the interference potential of the device as well as additional operating instructions for the user.

FCC Rating Label

The FCC rating label on the device shows the classification (A or B) of the equipment. Class B devices have an FCC logo or ID on the label. Class A devices do not have an FCC logo or ID on the label. After you determine the class of the device, refer to the corresponding statement.

Class A Equipment

This equipment has been tested and found to comply with the limits for a Class A digital device, pursuant to Part 15 of the FCC Rules. These limits are designed to provide reasonable protection against harmful interference when the equipment is operated in a commercial environment. This equipment generates, uses, and can radiate radio frequency energy and, if not installed and used in accordance with the instructions, may cause harmful interference to radio communications. Operation of this equipment in a residential area is likely to cause harmful interference, in which case the user will be required to correct the interference at personal expense.

Downloaded from www.Manualslib.com manuals search engine

Class B Equipment

This equipment has been tested and found to comply with the limits for a Class B digital device, pursuant to Part 15 of the FCC Rules. These limits are designed to provide reasonable protection against harmful interference in a residential installation. This equipment generates, uses, and can radiate radio frequency energy and, if not installed and used in accordance with the instructions, may cause harmful interference to radio communications. However, there is no guarantee that interference will not occur in a particular installation. If this equipment does cause harmful interference to radio or television reception, which can be determined by turning the equipment off and on, the user is encouraged to try to correct the interference by one or more of the following measures:

- Reorient or relocate the receiving antenna.
- Increase the separation between the equipment and receiver.
- Connect the equipment into an outlet on a circuit that is different from that to which the receiver is connected.
- Consult the dealer or an experienced radio or television technician for help.

Declaration of Conformity for Products Marked with the FCC Logo, United States Only

This device complies with Part 15 of the FCC Rules. Operation is subject to the following two conditions: (1) this device may not cause harmful interference, and (2) this device must accept any interference received, including interference that may cause undesired operation.

For questions regarding this product, contact us by mail or telephone:

- Hewlett-Packard Company
  P. O. Box 692000, Mail Stop 530113
  Houston, Texas 77269-2000
- 1-800-652-6672 (For continuous quality improvement, calls may be recorded or monitored.)

For questions regarding this FCC declaration, contact us by mail or telephone:

Downloaded from www.Manualslib.com manuals search engine

- Hewlett-Packard Company
  P. O. Box 692000, Mail Stop 510101
  Houston, Texas 77269-2000
- 1-281-514-3333

To identify this product, refer to the part, series, or model number found on the product.

Modifications

The FCC requires the user to be notified that any changes or modifications made to this device that are not expressly approved by Hewlett-Packard Company may void the user's authority to operate the equipment.

Cables

Connections to this device must be made with shielded cables with metallic RFI/EMI connector hoods in order to maintain compliance with FCC Rules and Regulations.

Canadian Notice (Avis Canadien)

Class A Equipment

This Class A digital apparatus meets all requirements of the Canadian Interference-Causing Equipment Regulations.

Cet appareil numérique de la classe A respecte toutes les exigences du Règlement sur le matériel brouilleur du Canada.

Class B Equipment

This Class B digital apparatus meets all requirements of the Canadian Interference-Causing Equipment Regulations.

Cet appareil numérique de la classe B respecte toutes les exigences du Règlement sur le matériel brouilleur du Canada.

Downloaded from www.Manualslib.com manuals search engine

European Union Notice

Products bearing the CE marking comply with the EMC Directive (89/336/EEC) and the Low Voltage Directive (73/23/EEC) issued by the Commission of the European Community and, if this product has telecommunication functionality, the R&TTE Directive (1999/5/EC).

Compliance with these directives implies conformity to the following European Norms (in parentheses are the equivalent international standards and regulations):

- EN 55022 (CISPR 22)—Electromagnetic Interference
- EN55024 (IEC61000-4-2, 3, 4, 5, 6, 8, 11)—Electromagnetic Immunity
- EN61000-3-2 (IEC61000-3-2)—Power Line Harmonics
- EN61000-3-3 (IEC61000-3-3)—Power Line Flicker
- EN 60950 (IEC60950)—Product Safety

Japanese Notice

ご使用になっている装置にVCCIマークが付いていましたら、次の説明文をお読み下さい。

この装置は、情報処理装置等電波障害自主規制協議会（VCCI）の基準に基づくクラスB情報技術装置です。この装置は、家庭環境で使用することを目的としていますが、この装置がラジオやテレビジョン受信機に近接して使用されると、受信障害を引き起こすことがあります。
取扱説明書に従って正しい取り扱いをして下さい。

VCCIマークが付いていない場合には、次の点にご注意下さい。

この装置は、情報処理装置等電波障害自主規制協議会（VCCI）の基準に基づくクラスA情報技術装置です　この装置を家庭環境で使用すると電波妨害を引き起こすことがあります。この場合には使用者が適切な対策を講ずるよう要求されることがあります。

Downloaded from www.Manualslib.com manuals search engine

BSMI Notice

警告使用者:

這是甲類的資訊產品，在居住的環境中使用時，可能會造成射頻干擾，在這種情況下，使用者會被要求採取某些適當的對策。

Korean Notices

Class A Equipment

A급 기기 (업무용 정보통신기기)

이 기기는 업무용으로 전자파적합등록을 한 기기이오니 판매자 또는 사용자는 이 점을 주의하시기 바라며, 만약 잘못판매 또는 구입하였을 때에는 가정용으로 교환하시기 바랍니다.

Class B Equipment

B급 기기 (가정용 정보통신기기)

이 기기는 가정용으로 전자파적합등록을 한 기기로서 주거지역에서는 물론 모든지역에서 사용할 수 있습니다.

Downloaded from www.Manualslib.com manuals search engine

Acronyms and Abbreviations

CPU

central processing unit

CRC

cyclic redundant checks

DHCP

Dynamic Host Configuration Protocol

EID

electronic identification number

EPR

engineer problem resolution

IA

Interface Adapter

IP

Internet Protocol

KVM

keyboard, video, and mouse

Downloaded from www.Manualslib.com manuals search engine

OSD

on-screen display

RPM

Red Hat Package Manager

TCP

Transmission Control Protocol

TFTP

Trivial File Transfer Protocol

USB

universal serial bus

UTP

unshielded twisted pair

VDC

voltage direct-current

VGA

video graphics array

Downloaded from www.Manualslib.com manuals search engine

Index

A

B

C

D

Downloaded from www.Manualslib.com manuals search engine

E

F

H

I

J

K

L

M

N

O

P

Downloaded from www.Manualslib.com manuals search engine

Downloaded from www.Manualslib.com manuals search engine